TOP VIEW

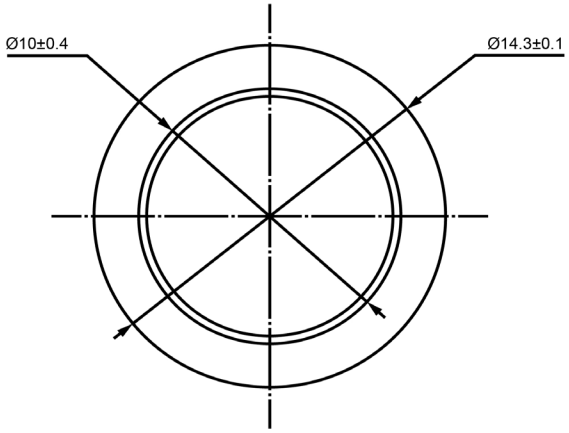

SIDE VIEW

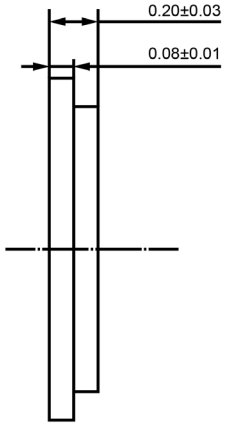

Specifications

Description	Value	Unit
Resonant Frequency	5,100	(Hz)
Resonant Impedance (Max)	1,000	(Ohm)
Max Input Voltage	30	(V)
Capacitance	10,000	(pF)
Plate Material	Brass	
Operating Temperature	-20 ~ +60	°C
Storage Temperature	-20 ~ +70	°C

Notes

1) All dimensions are in mm unless otherwise noted
2) All parts meet RoHS

DB UNLIMITED

Revision History

Version	Description	Date	Approved
1	Released from Engineering	10/21/2013	J.S

Drawn by	Date	Checked by	Date	Approved by	Date
A.B.	10/21/2013	C.E.	10/21/2013	J.S	10/21/2013

Piezo Bender

P14051-1

sales@dbunlimitedco.com | www.dbunlimitedco.com
©2013, DB Unlimited