AWM5101VN

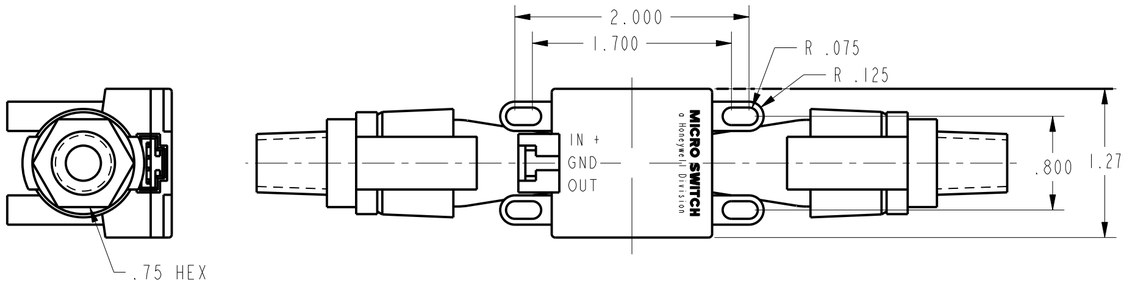

SPECIFICATIONS

RECOMMENDED POWER SUPPLY (1)	10.00±.01 VDC
MINIMUM POWER SUPPLY	8.0 VDC
MAXIMUM POWER SUPPLY	15 VDC
POWER CONSUMPTION	100mW MAX
OUTPUT TYPE	LINEAR, 1 TO 5 VDC
CALIBRATION GAS	NITROGEN
GAS FLOW RANGE *	0-5 SLM *
OUTPUT @ LASER TRIM POINT	5 VDC @ FULL SCALE FLOW
DIFFERENTIAL PRESSURE @ FULL SCALE	SEE PRESSURE VS. AIRFLOW CHART
NULL OUTPUT	1.00±.05 VDC
NULL OUTPUT SHIFT, 0 TO +50°C	±.050 VDC TYP, ±.100 VDC MAX
FULL SCALE OUTPUT SHIFT, 0 TO +25°C, +25 TO 50°C	7% READING MAX
LINEARITY ERROR (2)	±3.0% READING
REPEATABILITY & HYSTERESIS	±0.5% F.S.O.
RESPONSE TIME	60.0 mSEC MAX
STORAGE TEMPERATURE RANGE	-20° TO 70°C
OPERATION TEMPERATURE RANGE (5)	0° TO 50°C
TERMINATION (.100 CENTERS)	.025 SQUARE
CONNECTOR (4 PIN RECEPTACLE) (3)	AMP (103956-3)
WEIGHT	30 GRAMS (2.12OZ)
SHOCK RATING	100 g PEAK, 6 mSEC HALF-SINE (3 DROPS EACH DIRECTION OF 3 AXES)
OVERPRESSURE	50 PSI MAX
LEAK RATE, MAX	0.1 PSI/MIN AT STATIC CONDITION

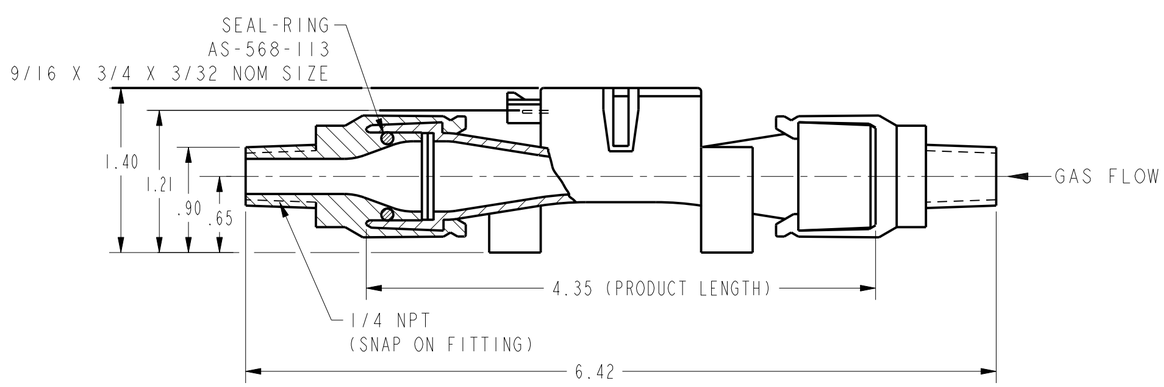

NOTES

(1) CANNOT GUARANTEE CALIBRATION AT SUPPLY VOLTAGES OTHER THAN 10.00±.01 VDC

(2) LINEARITY SPECIFICATION APPLIES FROM 2 TO 100% FULL SCALE OF GAS FLOW RANGE, AND DOES ON APPLY TO NULL OUTPUT AT 0 SLM *

(3) SUPPLIED IN STRIP FORM. OTHER STRIP FORM RECEPTACLES ARE AVAILABLE, AS WELL AS VARIOUS TOOLS TO ASSEMBLE RECEPTACLES IN STRIP FORM. INDIVIDUAL RECEPTACLE ASSEMBLIES ARE ALSO AVAILABLE FROM AMP

(4) MOLDED-IN ARROW DESIGNATES GAS FLOW DIRECTION

* SLM DENOTES STANDARD LITERS PER MINUTE WHICH IS A FLOW MEASUREMENT REFERENCED TO STANDARD CONDITIONS OF 0°C, 760 TORR (SEA LEVEL), 50% RH

(5) TEMPERATURE TRANSITIONS 1.66°C/MINUTE MAXIMUM WHILE IN OPERATION

OUTPUT CONNECTIONS
PIN 1 + SUPPLY VOLTAGE
PIN 2 GROUND
PIN 3 NO CONNECTION
PIN 4 OUTPUT VOLTAGE

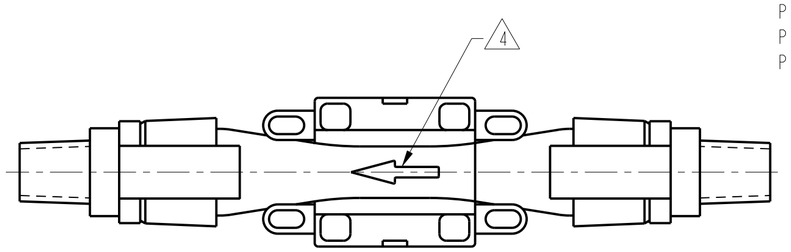

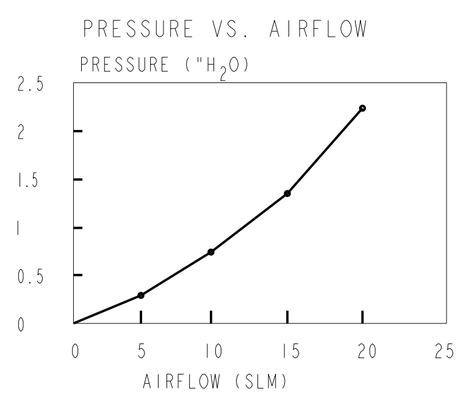

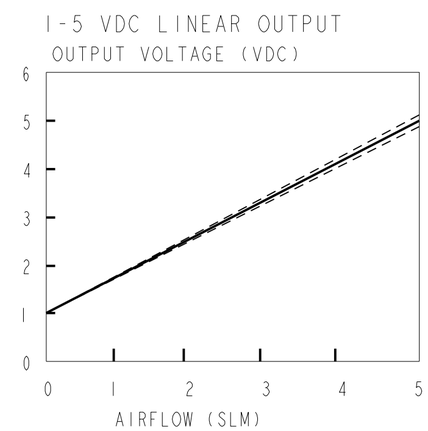

±3% READING
MEAN
MIN
MAX

THIS DRAWING COVERS A PROPRIETARY ITEM AND IS THE PROPERTY OF MICRO SWITCH, A DIVISION OF HONEYWELL. THIS DRAWING IS NOT TO BE COPIED OR USED WITHOUT THE APPROVAL OF MICRO SWITCH.

MICRO SWITCH a Honeywell Division
FED. MFG. CODE 91929

MASS AIRFLOW SENSOR

CATALOG LISTING
AWM5101VN

THIRD ANGLE PROJECTION

SCALE FULL

DO NOT SCALE PRINT

UNLESS OTHERWISE SPECIFIED TOLERANCES ARE

ONE PLACE	(.0)	±.030
TWO PLACES	(.00)	±.015
THREE PLACES	(.000)	±.005
ANGLES		±

WEIGHT

ANSI Y14.5M-1982 APPLIES

AWM5101VN | PAGE 1 OF 1 | RELEASE NO. PR-20105 | REPLACES X94835-AW | DRAWING NUMBER | ISSUE 6

REVISIONS			
A	202464	GJW 07 MAR 01	
B	0027347	RS 28DEC06	16JAN08
C	0036560	SSK 16JAN08	CMH

DRAWN	GJW	07 MAR 01	CHECK	SAV	07 MAR 01	CHECK

PTC/CAD 2D

Downloaded from Arrow.com.