3M™ 25G SFP28 Direct Attach Copper Cable Assemblies, 1422/1423 Series

Visit 3M.com/interconnect

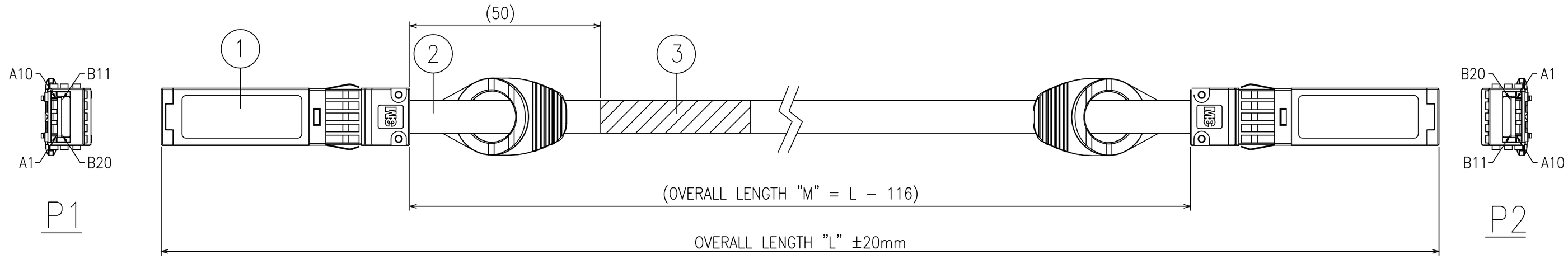

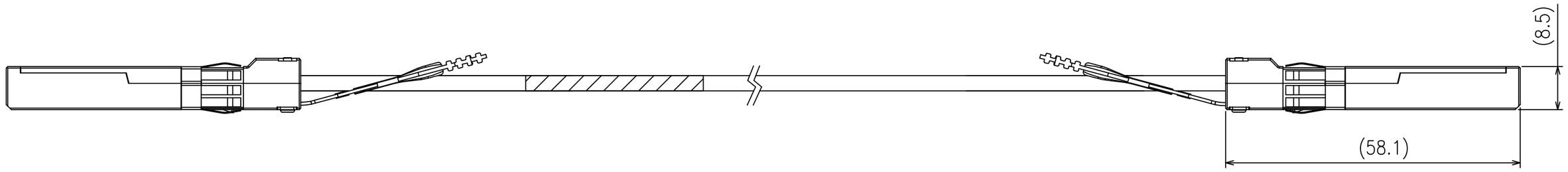

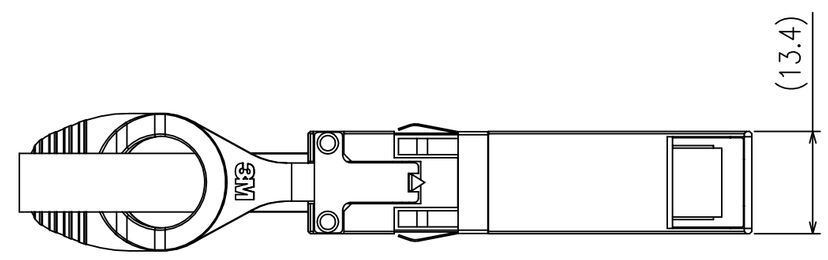

NOTES:

1. ORDERING INFORMATION:

14XX–P XX–07–X.XX

22–UNIVERSAL PULLTAB (BOTTOM)
23–UNIVERSAL PULLTAB (TOP)

LENGTH OPTIONS "L" (in meters)

PASSIVE UNEQUALIZED

CODE	CABLE CONFIGURATION
24	30AWG UTJ PVC JACKET COLOR BLACK WITH COPPER FOIL (UPTO 2METERS)
34	26AWG UTJ PVC JACKET COLOR BLACK WITH COPPER FOIL (2METERS to 4METERS)

2. MATERIALS:
   ① – SFP+ SHELL KIT, 2 PCS
   ② – HEAT SHRINKABLE TUBE BLACK (OPTIONAL), 2 PCS
   ③ – LILONG LABEL=CLEAR/WHITE BACKGROUND WITH BLACK TEXT, TEXT H=2.00MM, ARIAL, L*W=40*30MM, "YYWW" IS DATE CODE, e.g YEAR=2007, WEEK=26, YYWW=0726

3. CABLE JACKET DETAIL: PVC, COLOR BLACK

4. THIS CABLE ASSEMBLY IS RoHS COMPLIANT

5. BULK CABLE IMPEDANCE: 100±5 OHMS (DIFFERENTIAL)

6. DESIGN TO SFP STANDARD SFF–8431

7. UNLESS OTHERWISE NOTED, REFERENCES TO INDUSTRY SPECIFICATIONS ARE INTENDED TO INDICATE SUBSTANTIAL COMPLIANCE TO THE MATERIAL ELEMENTS OF THE SPECIFICATION. SUCH REFERENCES SHOULD NOT BE CONSTRUED AS A GUARANTEE OF COMPLIANCE TO ALL REQUIREMENTS IN A GIVEN SPECIFICATION.

8. CABLE RETURN LOSS PERFORMANCE IS VALID FOR CABLE ASSEMBLIES OF A MINIMUM OF 1.00 METER IN LENGTH. CABLE ASSEMBLIES LESS THAN 1.00 METER IN LENGTH MAY NOT ACHIEVE THE RETURN LOSS PERFORMANCE IN IEEE802.3bj. CABLE RETURN LOSS PERFORMANCE IS SUBJECT TO CHANGE WITH DIFFERENT CABLE ASSEMBLY LENGTHS. END USER WILL NEED TO DETERMINE WHETHER THIS PRODUCT IS SUITABLE FOR THEIR INTENDED APPLICATION.

P1/P2	
PIN NO.	SYMBOL
1	VeeT
2	Tx_Fault
3	Tx_Disable
4	SDA
5	SCL
6	Mod_ABS
7	RS0
8	Rx_LOS
9	RS1
10	VeeR

ASSEMBLY PINOUT

P1		P2	
B11	GND	B20	GND
B12	Rx–	B19	Tx–
B13	Rx+	B18	Tx+
B14	GND	B17	GND
B15	–	B16	–
B16	–	B15	–
B17	GND	B14	GND
B18	Tx+	B13	Rx+
B19	Tx–	B12	Rx–
B20	GND	B11	GND

REV	ECO	ISSUE DATE AND DESCRIPTION	DRFT	CHKD
C	0078965	MAY 03,2018	YL	YL
B	0076958	DEC 12,2017	YL	YL
A	0074719	JUL 12,2017	YL	YL

DESIGN REFERENCE | NEXT ASSEMBLY

DISTRIBUTION CODES

DRFT YUNLONG	DATE JUL 12,2017	MFG EDDIE	DATE JUL 12,2017
CHKD YUNLONG	DATE JUL 12,2017	APPVL SAUJIT BANDHU	DATE JUL 12,2017

DIVISION: EMSD

DIVISION CODE

DO NOT SCALE DRAWING

SCALE: NTS

TOLERANCES EXCEPT AS NOTED

INCHES: .0 ± / .00 ± / .000 ± / .0000 ±

THIRD ANGLE PROJECTION

INTERPRET PER ASME Y14.5 – 1994

MILLIMETERS: 0 ± / .0 ±.30 / .00 ±.15 / .000 ±.05

MAX SURFACE ROUGHNESS 125 √ ☐ ALL SURFACES ☒ MARKED ONLY

ANGLES ±1°

3M 3M Center St. Paul, MN 55144

© 3M COPYRIGHT 2018
This document and the information it contains are 3M property and may not be reproduced or further distributed without 3M permission, or used or disclosed other than for 3M authorized purposes. All rights reserved.

TITLE: 3M™ 25G SFP28 Direct Attach Copper Cable Assemblies, 1422/1423 Series

CAGE NUMBER	SIZE	DRAWING NO.	REV.
	C	78–5100–2664–0	C

MODEL | DET. LISTS ☐ YES ☒ NO | SHT 1 OF 2

78–5100–2664–0 C
DRAWING NUMBER REVISION

Downloaded from Arrow.com.

3M™ 25G SFP28 Direct Attach Copper Cable Assemblies, 1422/1423 Series
Visit 3M.com/interconnect

LABEL DETAIL

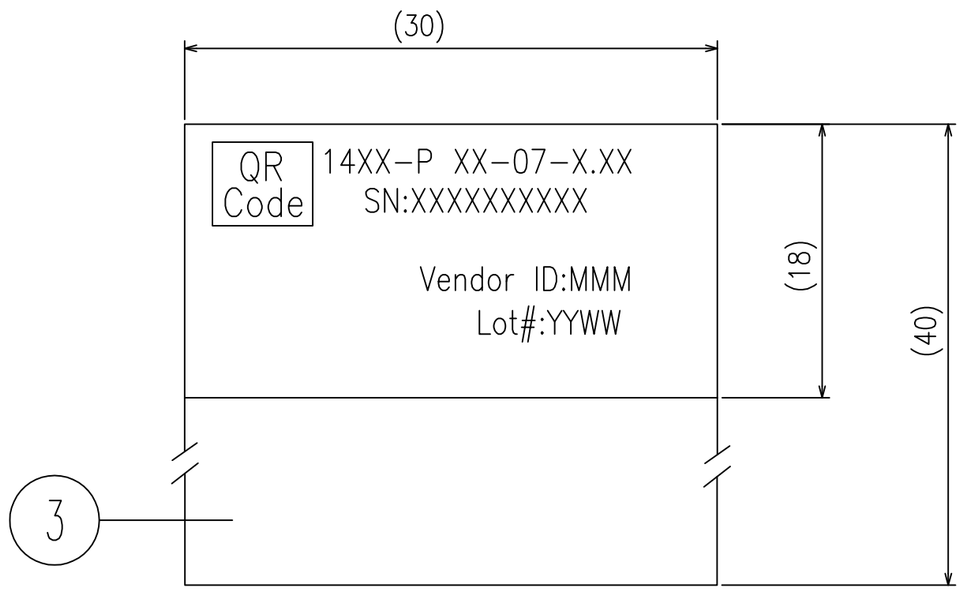

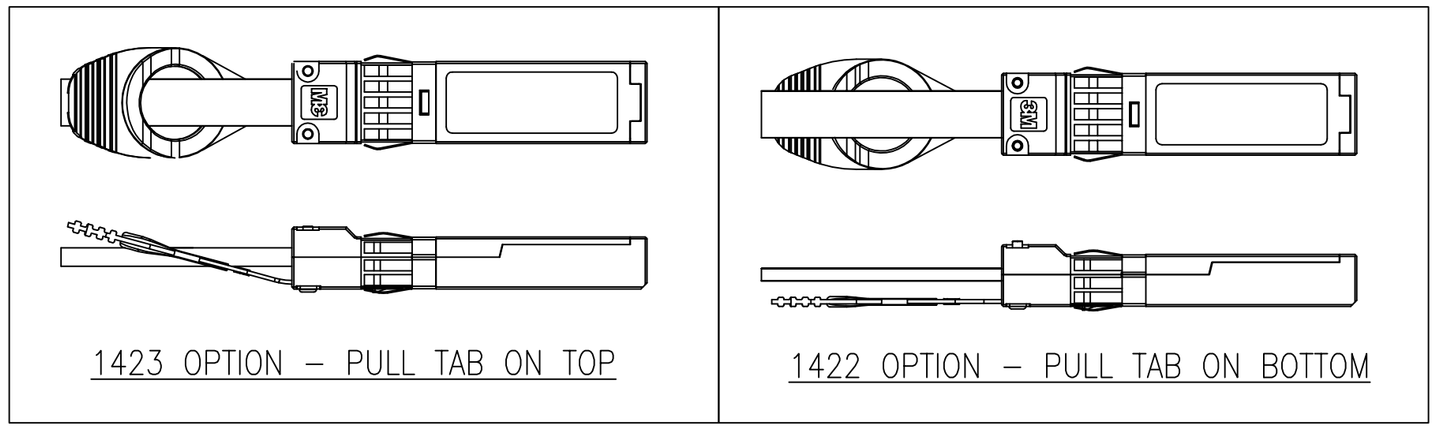

SERIAL NUMBER (QR CODE) FORMAT:

X XX X XX XXXX

- 1 DIGIT FOR PRODUCT DISTINCTION — SFP28 : Z
- 2 DIGIT FOR LENGHT DISTINCTION
  - 0.50m : 05
  - 0.75m : 07
  - 1.00m : 10
  - 3.00m : 30
- 1 DIGIT FOR PRODUCTION YEAR
  - 2011 : A
  - 2012 : B
  - 2013 : C
- 2 DIGIT FOR PRODUCTION WEEK
- 4 DIGIT SERIAL NUMBER 0001 TO 9999

EXAMPLE – PART NUMBER ORDER DETAIL

3M™ CABLE ASSEMBLY P/N	CABLE OPTIONS	CABLE SIZE (AWG)	CABLE LENGTH (METERS) "M"	TOTAL LENGTH (METERS) "L"	PULL TAB OPTIONS
1422-P24-07-0.50	UTJ PVC, Black, With copper foil	30AWG	0.38	0.5	BOTTOM
1422-P24-07-1.00	UTJ PVC, Black, With copper foil	30AWG	0.88	1.0	BOTTOM
1422-P24-07-2.00	UTJ PVC, Black, With copper foil	30AWG	1.88	2.0	BOTTOM
1422-P34-07-2.00	UTJ PVC, Black, With copper foil	26AWG	1.88	2.0	BOTTOM
1422-P34-07-3.00	UTJ PVC, Black, With copper foil	26AWG	2.88	3.0	BOTTOM
1422-P34-07-4.00	UTJ PVC, Black, With copper foil	26AWG	3.88	4.0	BOTTOM

Regulatory: For regulatory information about this product, visit 3M.com/regs or contact your 3M representative.

Technical Information: The technical information, recommendations and other statements contained in this document are based upon tests or experience that 3M believes are reliable, but the accuracy or completeness of such information is not guaranteed.

Product Use: Many factors beyond 3M's control and uniquely within user's control can affect the use and performance of a 3M product in a particular application. Given the variety of factors that can affect the use and performance of a 3M product, user is solely responsible for evaluating the 3M product and determining whether it is fit for a particular purpose and suitable for user's method of application.

Warranty, Limited Remedy, and Disclaimer: Unless an additional warranty is specifically stated on the applicable 3M product packaging or product literature, 3M warrants that each 3M product meets the applicable 3M product specification at the time 3M ships the product. 3M MAKES NO OTHER WARRANTIES OR CONDITIONS, EXPRESS OR IMPLIED, INCLUDING, BUT NOT LIMITED TO, ANY IMPLIED WARRANTY OR CONDITION OF MERCHANTABILITY OR FITNESS FOR A PARTICULAR PURPOSE OR ANY IMPLIED WARRANTY OR CONDITION ARISING OUT OF A COURSE OF DEALING, CUSTOM OR USAGE OR TRADE. If the 3M product does not conform to this warranty, then the sole and exclusive remedy is, at 3M's option, replacement of the 3M product or refund of the purchase price.

Limitation of Liability: Except where prohibited by law, 3M will not be liable for any loss or damage arising from the 3M product, whether direct, indirect, special, incidental or consequential, regardless of the legal theory asserted, including warranty, contract, negligence or strict liability.

3M is a trademark of 3M Company.

3M Electronics Materials Solutions Division
6801 River Place Blvd.
Austin, TX 78726-9000
1-800-225-5373
www.3M.com/interconnect

DESIGN REFERENCE | NEXT ASSEMBLY
DISTRIBUTION CODES
DIVISION: EMSD | DIVISION CODE
DO NOT SCALE DRAWING | SCALE NTS
TOLERANCES EXCEPT AS NOTED
INCHES: .0 ± / .00 ± / .000 ± / .0000 ±
THIRD ANGLE PROJECTION
INTERPRET PER ASME Y14.5 – 1994
MILLIMETERS: 0 ± / .0 ±.30 / .00 ±.15 / .000 ±.05
MAX SURFACE ROUGHNESS 125 √ ☐ ALL SURFACES ☒ MARKED ONLY
ANGLES ±1°

REFER TO PAGE 1

REV	ECO	ISSUE DATE AND DESCRIPTION	DRFT	CHKD
DRFT YUNLONG		DATE JUL 12,2017	MFG EDDIE	DATE JUL 12,2017
CHKD YUNLONG		DATE JUL 12,2017	APPVL SAUJIT BANDHU	DATE JUL 12,2017

3M Center St. Paul, MN 55144

© 3M COPYRIGHT 2018
This document and the information it contains are 3M property and may not be reproduced or further distributed without 3M permission, or used or disclosed other than for 3M authorized purposes. All rights reserved.

TITLE: 3M™ 25G SFP28 Direct Attach Copper Cable Assemblies, 1422/1423 Series

CAGE NUMBER | SIZE C | DRAWING NO. 78-5100-2664-0 | REV. C
MODEL | DET. LISTS ☐ YES ☒ NO | SHT 2 OF 2

78-5100-2664-0 DRAWING NUMBER | C REVISION

Downloaded from Arrow.com.