THIS DRAWING IS UNPUBLISHED. RELEASED FOR PUBLICATION -,- .
© COPYRIGHT - BY TYCO ELECTRONICS CORPORATION. ALL RIGHTS RESERVED.

LOC	DIST
A	66

REVISIONS

P	LTR	DESCRIPTION	DATE	DWN	APVD
	F	ECR-15-000123	JAN2015	RS	LZ

PART NUMBER	REV	FIRST USED	TERMINATOR	FEED TYPE	DESCRIPTION
1528030-1	F	-	LEADMAKER	MECH POST FEED	CUTS CARRIER
1528030-2	F	-	BENCH	MECH PRE FEED	CUTS CARRIER
1528030-6	F	-	LEADMAKER	MECH POST FEED	CONTINUOUS CARRIER
7-1528030-1	F	-	LEADMAKER	MECH POST FEED	-1 AND SPARE PARTS
7-1528030-2	F	-	BENCH	MECH PRE FEED	-2 AND SPARE PARTS
7-1528030-6	F	-	LEADMAKER	MECH POST FEED	-6 AND SPARE PARTS
7-1528030-7	A	-	-	-	SPARE PARTS KIT

CRIMP DATA PACKARD TERMINAL AMP CRIMP SPECS

TERMINAL NAME: TAXI TERM M GT 150 SLD △4

CRIMP	SIZE	TYPE	RANGE
WIRE	1.57 [.062 IN]	F	0.50mm²
INSUL	3.56 [.140 IN]	0	1.20-1.85 [.047-.073 IN]

WIRE STRIP LENGTH 4.80-5.60 [.189-.220 IN]

APPL INSTRUCTION 408-8322 & 408-8490

TERMINAL - - FEED
APPL SPEC 114-3118 - 11.00 [.433 IN]

TERMINALS APPLIED

AMP PN	MFR PN	AMP SEAL PN	MFR PN	-
286969-1	15326268	286970-1	15366021	-
-	-	-	-	-
-	-	-	-	-
-	-	-	-	-
-	-	-	-	-
-	-	-	-	-
-	-	-	-	-

WIRE SIZE mm² AWG	CRIMP HEIGHT * △6	REF SETTING
0.50mm²	1.17 ±0.05 [.046 ±.002 IN]	C8
-	-	-
-	-	-
-	-	-
-	-	-
-	-	-
-	-	-
-	-	-
-	-	-
-	-	-
-	-	-
-	-	-
-	-	-
-	-	-
-	-	-

SET UP GAGE	LAYOUT
458637-3	L1528030

△1 RECOMMENDED SPARE PARTS.
2. GREASE RAM, CAM, CAM FOLLOWER AND FEED ROD LIGHTLY.
3. LUBRICATE DAILY PER THE APPLICATOR INSTRUCTION SHEET SUPPLIED WITH THE APPLICATOR.
△4 THIS APPLICATOR APPLIES TERMINAL WITH A SEAL.
△5 APPLY TORQ-SEAL IN ALLEN SOCKET TO FILL HOLE AFTER FLAT HD HAS BEEN ADJUSTED TO CORRECT HEIGHT AT QUALIFICATION. APPLY #1-23419-5 LOC-TITE TO THREADS.
△6 CRIMP DATA CALCULATED BY TYCO ELECTRONICS.

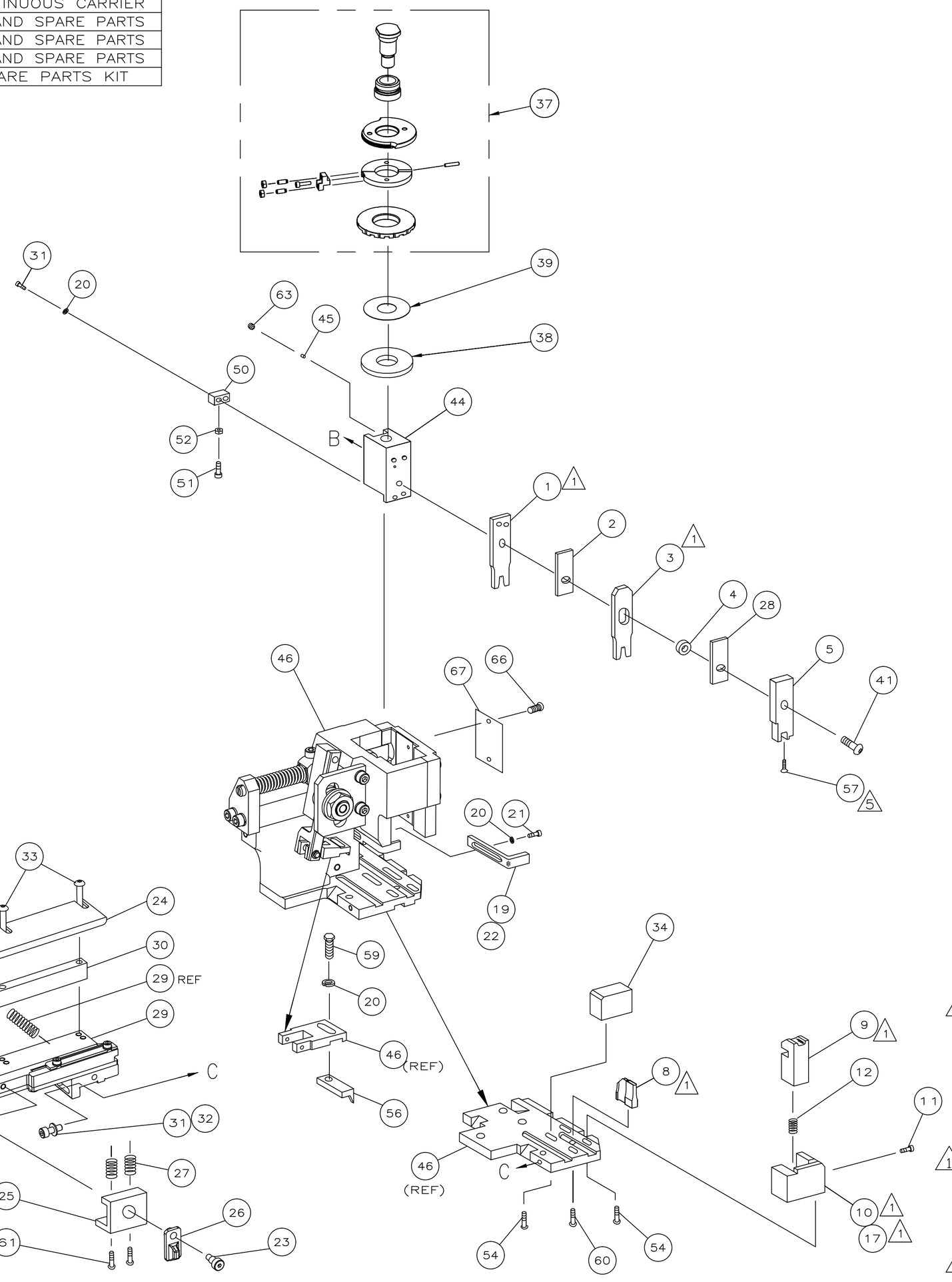

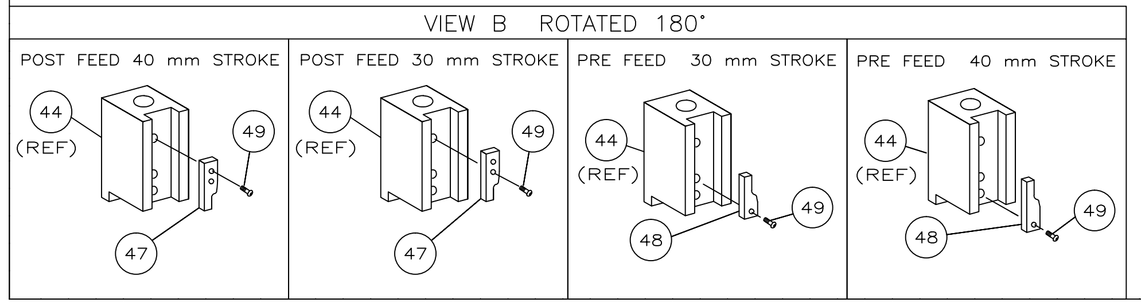

* WARNING:
ON INSTALLATION, SET WIRE DISC TO LARGEST WIRE SIZE SETTING. USE OF SETTINGS BELOW MIN REQ'D CRIMP HEIGHT SETTING WILL CAUSE DAMAGE TO CRIMP TOOLING.

QTY REQD PER ASSY							PART NO	DESCRIPTION	ITEM NO
									73
-	1	1	1	1	1	1	1528030	PRINT, APPLICATOR LOG SHEET	72
-	1	1	1	1	1	1	1338705-3	DOCUMENTATION PACKAGE	71
									70
									69
									68
-	1	1	1	1	1	1	461264-5	PLATE, IDENTIFICATION	67
-	2	2	2	2	2	2	21017-2	SCR,DRIVE(#2x.19)ID PLATE	66
									65
									64
-	1	1	1	1	1	1	3-18031-0	SCR,SKT SET(M6X6)RAM	63
									62
-	2	2	2	2	2	2	1-18024-5	SCR,BHC(M5X25)DRAG	61
-	1	1	1	1	1	1	18024-7	SCR,BHC(M4X10)ANVIL	60
-	1	1	1	1	1	1	5-18022-2	SCR,HEX(M4X8)FEED FINGER	59
									58
-	1	1	1	1	1	1	985575-3	SCR,FHC(M3X10)DEP	57
-	1	1	1	1	1	1	1338685-1	PAWL, FEED	56
									55
-	4	4	4	4	4	4	18024-8	SCR,BHC(M4x12)SHEAR HOLDER	54
									53
-	1	1	1	1	1	1	18030-1	NUT,HEX(M3)HOLD DOWN	52
-	1	1	1	1	1	1	811242-5	BUMPER, HOLDDOWN	51
-	1	1	1	1	1	1	690753-2	SPACER, TONKER	50
-	1	1	1	1	1	1	18024-3	SCR,BHC(M3X10)CAM	49
-	-	1	-	-	1	-	1338675-1	CAM, PRE FEED 30 & 40 mm ST	48
-	1	-	1	1	-	1	1338676-1	CAM, POST FEED 30 & 40 mm ST	47
-	1	1	1	1	1	1	1320999-3	APPLICATOR BASIC SUBASSY	46
-	1	1	1	1	1	1	690191-1	PLUG, NYLON	45
-	1	1	1	1	1	1	1338660-1	RAM	44
									43
									42
-	1	1	1	1	1	1	2-18024-6	SCR,BHC(M8X25)RAM	41
									40
-	1	1	1	1	1	1	690125-1	SHIM SUBASSY	39
-	1	1	1	1	1	1	469367-8	SPACER, FINE ADJUST	38
-	1	1	1	1	1	1	879103-2	FINE ADJUST HEAD SUBASSY	37
									36
									35
-	1	1	1	1	1	1	1320934-1	SUPPORT, TERMINAL	34
-	2	2	2	2	2	2	1-18024-0	SCR,BHC(M4X20)STRIP GUIDE	33
-	1	1	1	1	1	1	18027-2	WASHER, FLAT(M4)	32
-	3	3	3	3	3	3	1-18023-2	SCR,SKT CAP(M4X12)MOUNT BLOCK	31
-	1	1	1	1	1	1	1320908-8	SPACER, STRIP GUIDE	30
-	1	1	1	1	1	1	1633073-1	STRIP GUIDE PLATE ASSY	29
-	1	1	1	1	1	1	455888-3	SPACER, CRIMPER	28
-	2	2	2	2	2	2	1-22284-0	SPRING, DRAG	27
-	1	1	1	1	1	1	356835-1	LEVER, DRAG RELEASE	26
-	1	1	1	1	1	1	240792-1	DRAG, TERMINAL	25
-	1	1	1	1	1	1	1320928-1	PLATE, STRIP GUIDE	24
-	1	1	1	1	1	1	980371-4	SCR,SHC SHLD	23
-	1	-	1	1	-	1	690472-2	STRIPPER	22
-	1	1	1	1	1	1	1-18023-1	SCR,SHC(M4X10)STRIPPER	21
-	4	4	4	4	4	4	18025-2	WASHER,LOCK(M4)STRIPPER	20
-	-	1	-	-	1	-	690472-1	STRIPPER	19
									18
△1 -	1	-	-	1	-	-	1338684-2	HOLDER, SHEAR, FRONT (NO-CUT)	17
									16
									15
									14
									13
-	1	1	1	1	1	1	5-22280-0	SPRING, SHEAR	12
-	1	1	1	1	1	1	356885-5	STOP, SHEAR	11
-	-	1	1	-	1	1	1-1320921-0	HOLDER, SHEAR, FRONT (CUT)	10
△1 -	1	1	1	1	1	1	318707-2	SHEAR, FLOAT (FRONT)	9
1	2	2	2	1	1	1	2-1333202-1	ANVIL	8
									7
									6
-	1	1	1	1	1	1	1338680-3	DEPRESSOR, SHEAR (FRONT)	5
-	1	1	1	1	1	1	238011-2	SPACER, BLOCK CRIMPER	4
△1 1	2	2	2	1	1	1	456135-6	CRIMPER, INSULATION	3
-	1	1	1	1	1	1	1-455888-3	SPACER, CRIMPER	2
△1 1	2	2	2	1	1	1	456403-4	CRIMPER, WIRE	1
-77	-76	-72	-71	-6	-2	-1			

PARTS LIST

THIS DRAWING IS A CONTROLLED DOCUMENT.

DIMENSIONS: INCHES

TOLERANCES UNLESS OTHERWISE SPECIFIED:
0 PLC ± -
1 PLC ± -
2 PLC ± 0.5 [.02 IN]
3 PLC ± -
4 PLC ± -
ANGLES ± -

MATERIAL -
FINISH -

DWN M.CLIFFORD 20JUN01
CHK -
APVD F.BACKHURST 20JUN01
PRODUCT SPEC —
APPLICATION SPEC —
WEIGHT —

TE CONNECTIVITY
Harrisburg, PA 17105-3608

NAME FINE ADJ SIDE FD HD-I APPL
-
-

SIZE	CAGE CODE	DRAWING NO	RESTRICTED TO
A1	00779	C-1528030	—

CUSTOMER DRAWING SCALE - SHEET 1 OF 1 REV F

AMP 4805 REV 31MAR2000

15MAY2007 11:23am