THIS COPY IS PROVIDED ON A RESTRICTED BASIS AND IS NOT TO BE USED IN ANY WAY DETRIMENTAL TO THE INTERESTS OF PANDUIT CORP.

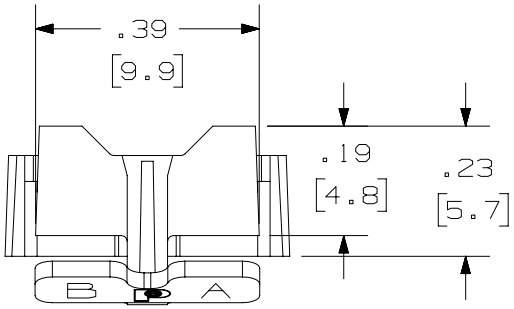

PANDUIT PART NUMBER	WEIGHT
FLCCLIPBL-L	.022 lb/50 Pcs [9.81 g/50 Pcs.]

NOTES:
1. SEE CURRENT CATALOG FOR ADDITIONAL PART NUMBER SUFFIXES TO INDICATE COLOR AND OR PACKAGE QUANTITY.
2. SEE CATALOG FOR COMPLETE LIST OF PARTS APPLICABLE FOR USE WITH THIS PART.
3. MATERIAL: PLASTIC
4. DIMENSIONS IN BRACKETS ARE METRIC [mm].

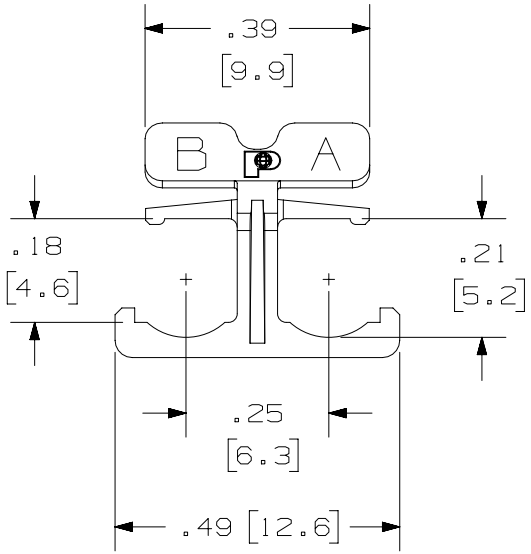

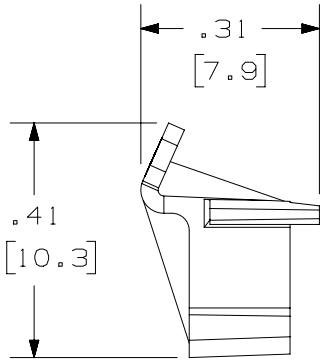

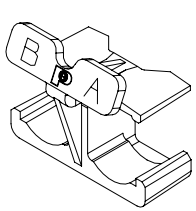

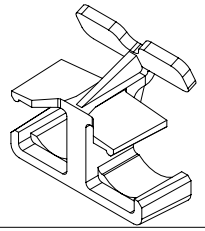

PART NUMBER: FLCCLIPBL-L

TITLE: OPTICAM LC DUPLEX CLIP

CUSTOMER DRAWING

ITEM REVISION NAME: M01801DP/00

DATASET FILE NAME: M01801DP_DC/00B

UNLESS OTHERWISE SPECIFIED, DIMENSIONAL TOLERANCES ARE: IN [mm]

.X ± .XXX ±

.XX ± ANGLES ±

THIRD ANGLE PROJECTION

MATERIAL:

DRAWING NUMBER: 01801-35

DRAWN BY	DATE	CHK	SCALE		SIZE
MC	6-27-06	GLK	NONE	SHT 1 OF 1	A

REV	DATE	BY	CHK	APR	DESCRIPTION	ECN
1	6/17/15	JSP	WJM	RWB	A. REVISED DRAWING TITLE BLOCK.	01801-35

D10100DA/14

Downloaded from Arrow.com.