PART NAME	PTH MOUNTING PLATE (PLASTIC)	PART No.	PTX-22460-P	REVISION DATE	10-20-17

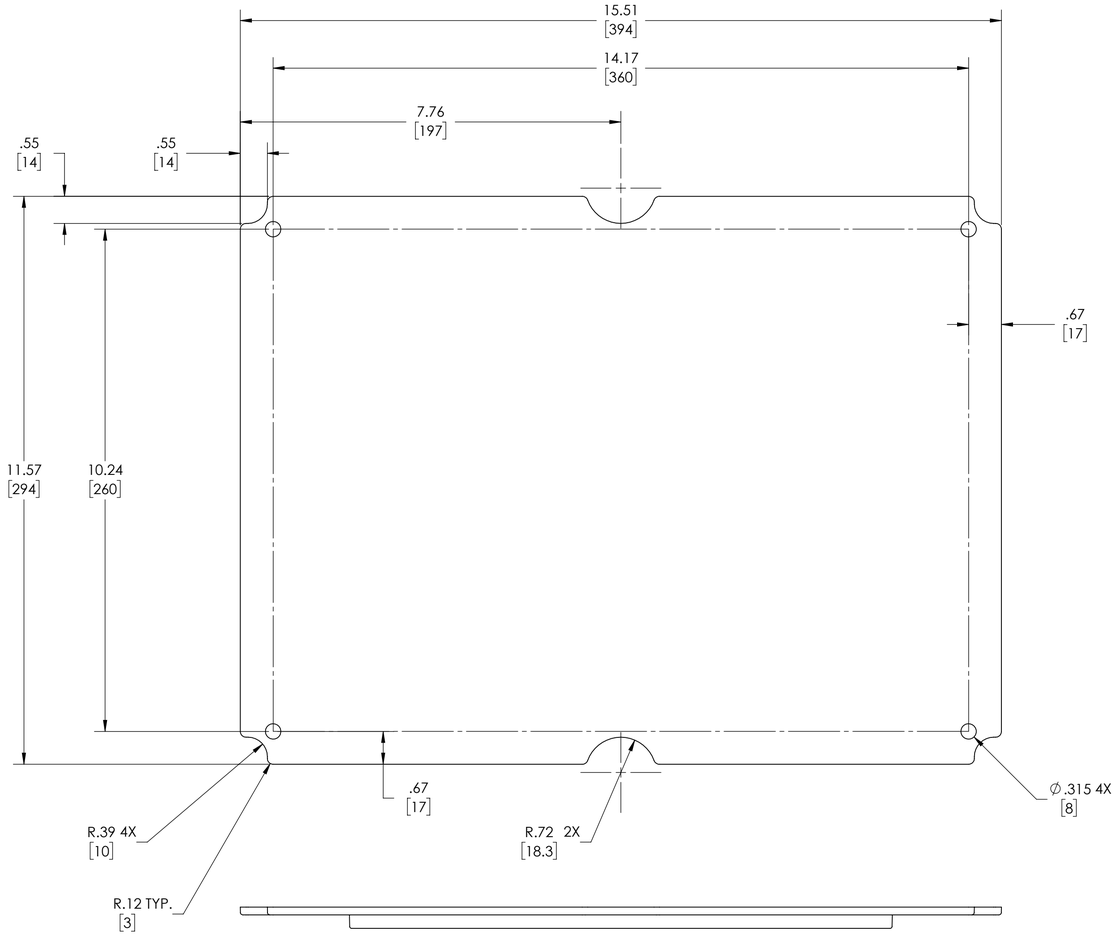

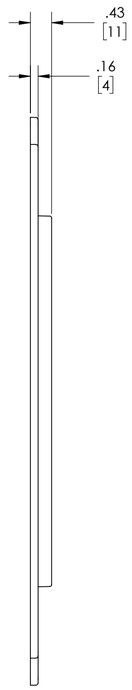

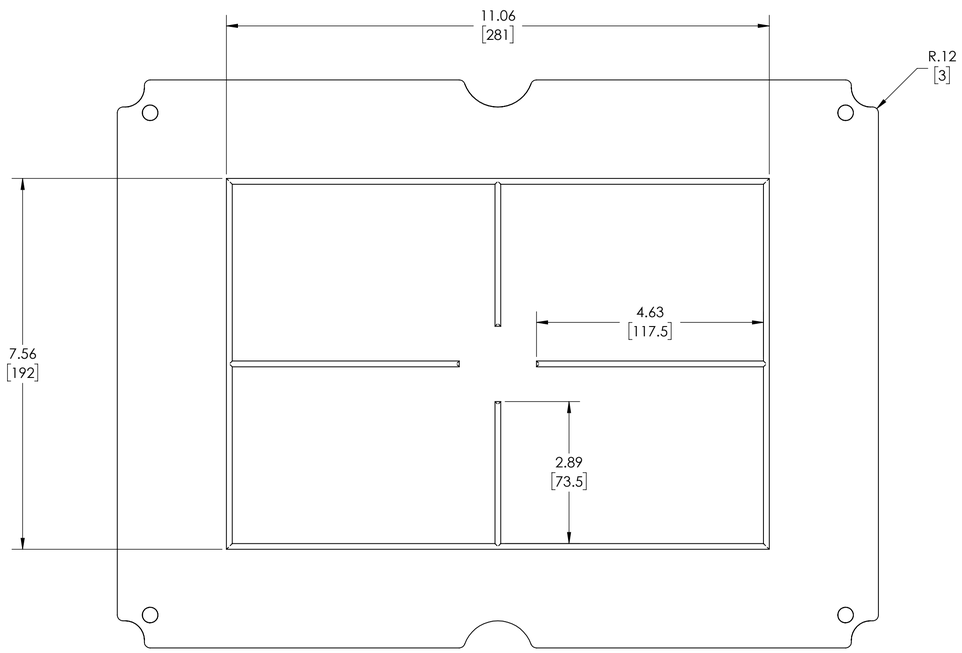

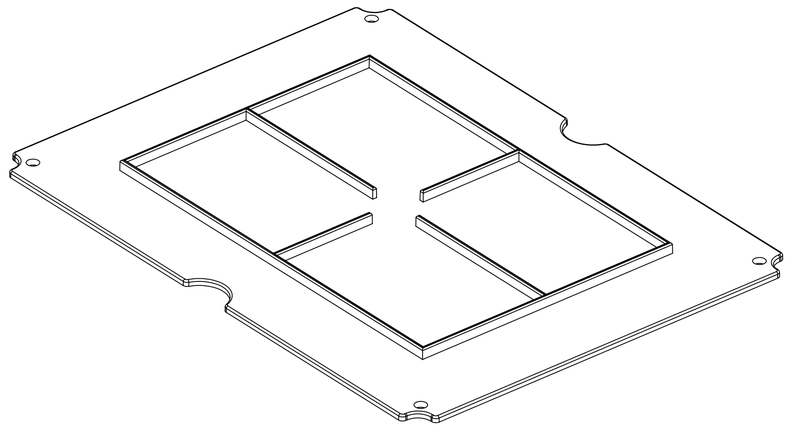

DRAWING FOR REFERENCE

WE RESERVE THE RIGHT TO MAKE CHANGES TO OUR STANDARD PRODUCTS. PLEASE CONSULT WITH BUD INDUSTRIES PRIOR TO USING THIS DRAWING FOR DESIGN PURPOSE.

MATERIAL - ABS PLASTIC

FINISH - LIGHT GRAY

DIMENSIONS IN INCH[MM]

PANEL FITS THE FOLLOWING ENCLOSURES:
PTH-22460 & PTH-22460-C
PTH-22760-L & PTH-22760-LC

Downloaded from Arrow.com.