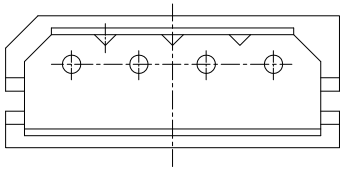

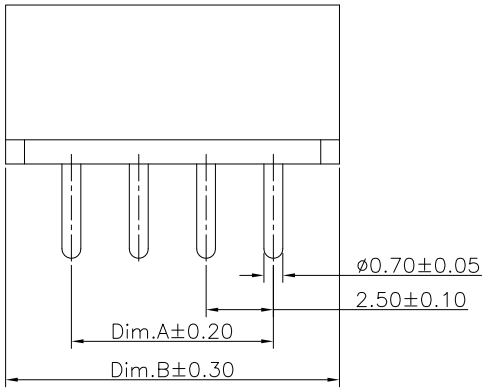

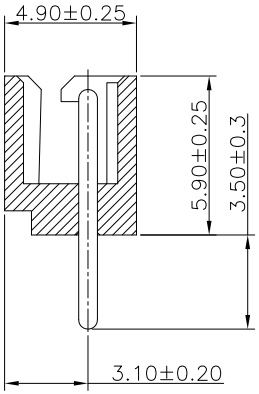

Specifications:
Current Rating:3.0A AC,DC
Voltage Rating:250V AC,DC
Contact Resistance:20mohm Max
Insulation Resistance:1000Mohm Min.
Withstanding Voltage:1000V AC/minute
Operating Temperature Range:−40°C~+85°C

Material and Finish
Insulator:Nylon 66 UL94V−0
Insulator Color:Beige
Contact:Brass
Plating:Tin Plated

Dimension:

Circuits	Dim.A	Dim.B	Circuits	Dim.A	Dim.B
2	2.50	7.50	9	20.00	25.00
3	5.00	10.00	10	22.50	27.50
4	7.50	12.50	11	25.00	30.00
5	10.00	15.00	12	27.50	32.50
6	12.50	17.50			
7	15.00	20.00			
8	17.50	22.50			

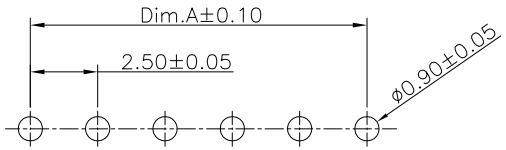

PCB Layout

RoHS Compliant

REV	DATE	FILE	BY
	17−Nov−2020		

DRAWN:

CHECKED:

APPROVAL:

GENERAL TOLERANCE:
.X=±0.20
.XX=±0.15

UNIT: MM

SCALE:1:1

SHEET: 1 / 2

PROJECTION:

CnC Tech
Industrial Cable and Connector Technology

DESCRIPTION: Wire-To Board Wafer, 2.5mm,Straight,Tin Plated,M Series

PART NO: 52025-XX-0100-01

SIZE A4

Downloaded from Arrow.com.