BUD	PART NAME	PTH MOUNTING PLATE (PLASTIC)	PART No.	PTX-22442-P	REVISION DATE	10-20-17

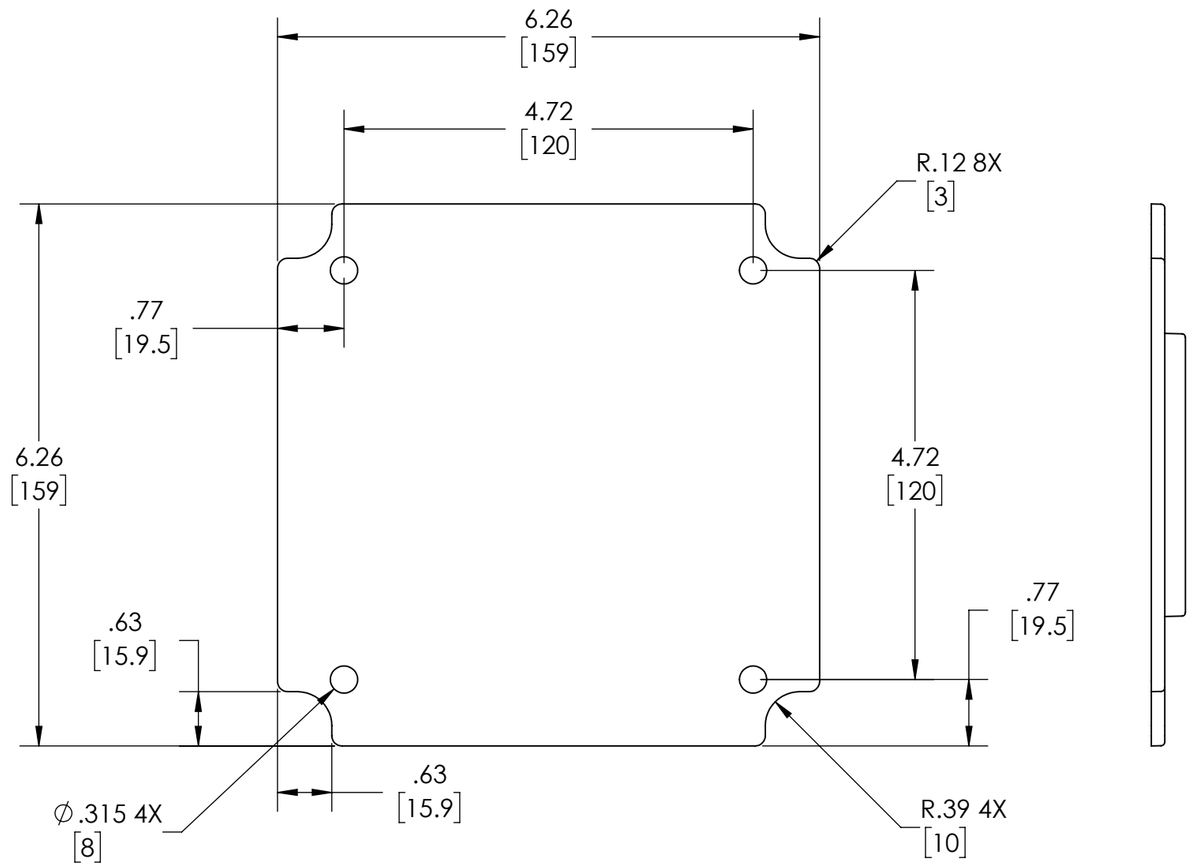

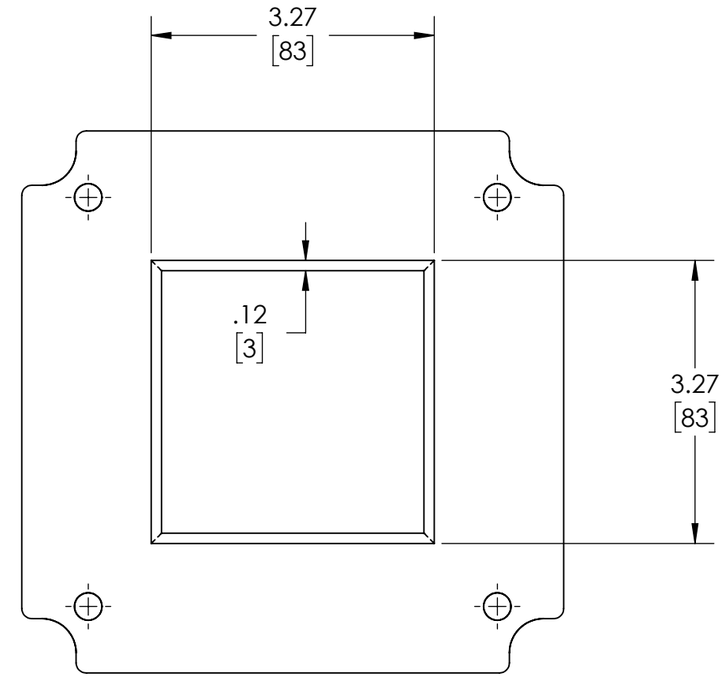

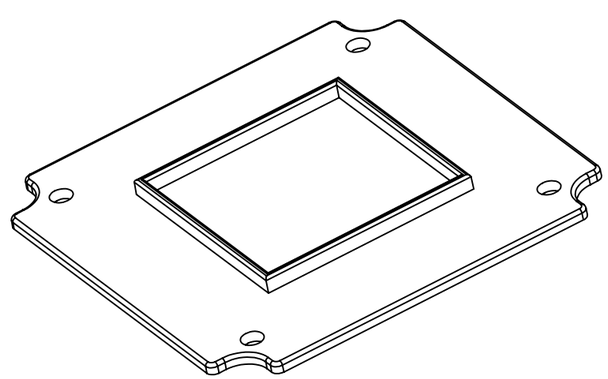

DRAWING FOR REFERENCE

WE RESERVE THE RIGHT TO MAKE CHANGES TO OUR STANDARD PRODUCTS. PLEASE CONSULT WITH BUD INDUSTRIES PRIOR TO USING THIS DRAWING FOR DESIGN PURPOSE.

MATERIAL - ABS PLASTIC

FINISH - LIGHT GRAY

DIMENSIONS ARE INCH[MM]

PANEL FITS THE FOLLOWING ENCLOSURES:
PTH-22442 & PTH-22442-C

Downloaded from Arrow.com.