This document is the property of Amphenol Corporation and is delivered on the express condition that it is not to be disclosed, reproduced or used, in whole or in part, for manufacture or sale by anyone other than Amphenol Corporation without its prior concert, & that no right is granted to disclose or to use any information in this document.

Customer Drawing

REVISIONS				
SYM	ECN	DESCRIPTION	DATE	APPROVED
1	HK--	First Release Drawing	04/23/13	IP
2	HK--	Update Drawing	02/02/18	IP
3	HK--	Update Drawing	9/11'18	IP

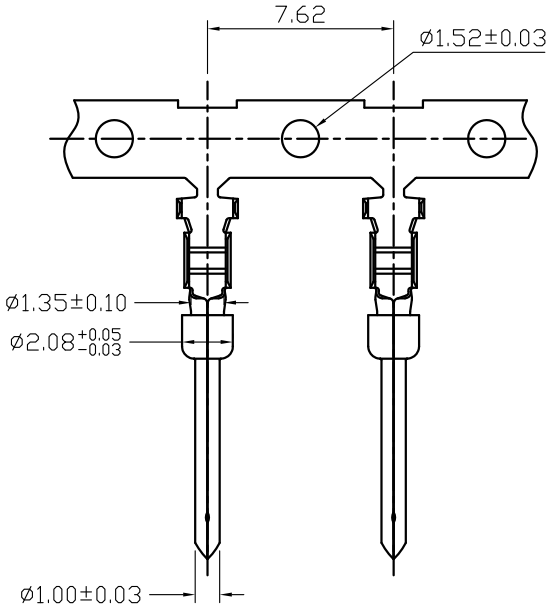

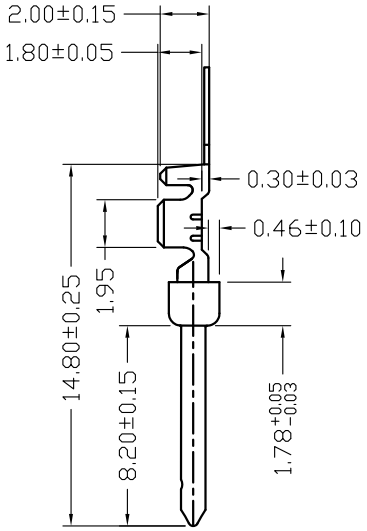

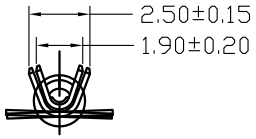

Material: Copper Alloy

Crimp height only for reference

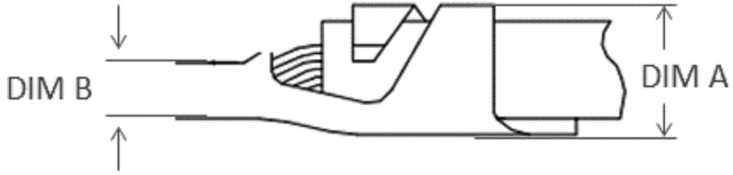

WIRE SIZE AWG	CRIMP HEIGHT (mm) +/-0.10	
	DIM A	DIM B
20	2.1	1.05
24	1.7	0.85

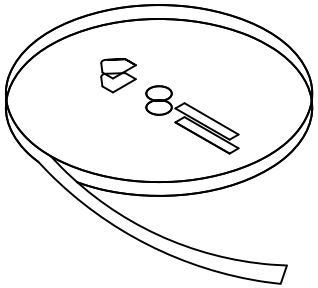

Left feed reel

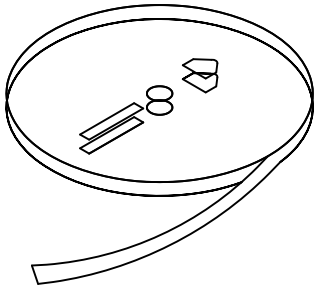

Right feed reel

PRODUCT CODE

L 17 RR D1 M XX XXX

- L: RoHS Compliance
- Standard Density
- Wire size: 20 to 24 AWG
- Contact type: M=Male
- Packaging
  - 100=bulkpack unit(100 cts)
  - 400=reel of 400 cts
  - 2K=reel of 2000 cts
  - 10K= Reel Of 10000 Cts (Right feed reel)
  - 10G=reel of 10000 cts (left feed reel)
- Full Gold Plating:
  - 01=Flash gold
  - 02=0.4u(15u")
  - 04= 0.76u(30u")
- Selective gold Plating:
  - 11=Flash gold +2um(78u")Sn
  - 12=0.4u(15u") +2um(78u")Sn
  - 14=0.76u(30u") +2um(78u")Sn

UNLESS OTHERWISE SPECIFIED TOLERANCES

	U.S.	METRIC
.X +/-		0.50
.XX +/-		0.30
.XXX +/-		0.20
FRACTIONS +/-		
ANGLES +/-		5°

FOR MATERIALS AND FINISHES SEE NOTES

REMOVE SHARP EDGES

DIMENSIONS: U.S. INCHES / METRIC MM

APPROVAL		DATE
DRAWN	Felix.Liu	02/02/18
CHECKED	Tony.Tang	02/02/18
CHECKED		

DRAWING FILE :

ANGLE OF PROJECTION

Amphenol

TITLE: RR crimping contact Male

SIZE	DRAWING NO.	REV.
A4	L17RRD1MXXXXX	3

SCALE NONE — SHEET 1 OF 1

Downloaded from Arrow.com.