National Semiconductor

June 1989

DM54LS251/DM74LS251 TRI-STATE® Data Selectors/Multiplexers

General Description

These data selectors/multiplexers contain full on-chip binary decoding to select one-of-eight data sources, and feature a strobe-controlled TRI-STATE output. The strobe must be at a low logic level to enable these devices. The TRI-STATE outputs permit direct connection to a common bus. When the strobe input is high, both outputs are in a high-impedance state in which both the upper and lower transistors of each totem-pole output are off, and the output neither drives nor loads the bus significantly. When the strobe is low, the outputs are activated and operate as standard TTL totem-pole outputs.

To minimize the possibility that two outputs will attempt to take a common bus to opposite logic levels, the output control circuitry is designed so that the average output disable time is shorter than the average output enable time.

Features

- TRI-STATE version of LS151
- Interface directly with system bus
- Perform parallel-to-serial conversion
- Permit multiplexing from N-lines to one line
- Complementary outputs provide true and inverted data
- Maximum number of common outputs
  54LS 49
  74LS 129
- Typical propagation delay time (D to Y)
  54LS 17 ns
  74LS 17 ns
- Typical power dissipation
  54LS 35 mW
  74LS 35 mW

Connection Diagram

Dual-In-Line Package

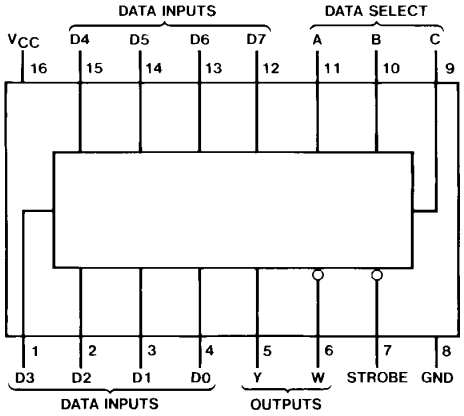

TL/F/6415–1

Order Number DM54LS251J, DM54LS251W, DM74LS251M or DM74LS251N
See NS Package Number J16A, M16A, N16E or W16A

Function Table

Inputs				Outputs	
Select			Strobe		
C	B	A	S	Y	W
X	X	X	H	Z	Z
L	L	L	L	D0	$\overline{D0}$
L	L	H	L	D1	$\overline{D1}$
L	H	L	L	D2	$\overline{D2}$
L	H	H	L	D3	$\overline{D3}$
H	L	L	L	D4	$\overline{D4}$
H	L	H	L	D5	$\overline{D5}$
H	H	L	L	D6	$\overline{D6}$
H	H	H	L	D7	$\overline{D7}$

H = High Logic Level, L = Low Logic Level,
X = Don't Care, Z = High Impedance (Off)
D0, D1 . . . D7 = The level of the respective D input

TRI-STATE® is a registered trademark of National Semiconductor Corporation.

©1995 National Semiconductor Corporation TL/F/6415

Absolute Maximum Ratings (Note)

If Military/Aerospace specified devices are required, please contact the National Semiconductor Sales Office/Distributors for availability and specifications.

Supply Voltage	7V
Input Voltage	7V
Operating Free Air Temperature Range	
DM54LS	−55°C to +125°C
DM74LS	0°C to +70°C
Storage Temperature Range	−65°C to +150°C

Note: *The "Absolute Maximum Ratings" are those values beyond which the safety of the device cannot be guaranteed. The device should not be operated at these limits. The parametric values defined in the "Electrical Characteristics" table are not guaranteed at the absolute maximum ratings. The "Recommended Operating Conditions" table will define the conditions for actual device operation.*

Recommended Operating Conditions

Symbol	Parameter	DM54LS251			DM74LS251			Units
		Min	Nom	Max	Min	Nom	Max	
V_{CC}	Supply Voltage	4.5	5	5.5	4.75	5	5.25	V
V_{IH}	High Level Input Voltage	2			2			V
V_{IL}	Low Level Input Voltage			0.7			0.8	V
I_{OH}	High Level Output Current			−1			−2.6	mA
I_{OL}	Low Level Output Current			12			24	mA
T_A	Free Air Operating Temperature	−55		125	0		70	°C

Electrical Characteristics over recommended operating free air temperature range (unless otherwise noted)

Symbol	Parameter	Conditions		Min	Typ (Note 1)	Max	Units
V_I	Input Clamp Voltage	V_{CC} = Min, I_I = −18 mA				−1.5	V
V_{OH}	High Level Output Voltage	V_{CC} = Min, I_{OH} = Max, V_{IL} = Max, V_{IH} = Min	DM54	2.4	3.4		V
			DM74	2.4	3.1		
V_{OL}	Low Level Output Voltage	V_{CC} = Min, I_{OL} = Max, V_{IL} = Max, V_{IH} = Min	DM54		0.25	0.4	V
			DM74		0.35	0.5	
		I_{OL} = 12 mA, V_{CC} = Min	DM74		0.25	0.4	
I_I	Input Current @ Max Input Voltage	V_{CC} = Max, V_I = 7V				0.1	mA
I_{IH}	High Level Input Current	V_{CC} = Max, V_I = 2.7V				20	μA
I_{IL}	Low Level Input Current	V_{CC} = Max, V_I = 0.4V				−0.4	mA
I_{OZH}	Off-State Output Current with High Level Output Voltage Applied	V_{CC} = Max, V_O = 2.7V, V_{IH} = Min, V_{IL} = Max				20	μA
I_{OZL}	Off-State Output Current with Low Level Output Voltage Applied	V_{CC} = Max, V_O = 0.4V, V_{IH} = Min, V_{IL} = Max				−20	μA
I_{OS}	Short Circuit Output Current	V_{CC} = Max (Note 2)	DM54	−20		−100	mA
			DM74	−20		−100	
I_{CC1}	Supply Current	V_{CC} = Max (Note 3)			6.1	10	mA
I_{CC2}	Supply Current	V_{CC} = Max (Note 4)			7.1	12	mA

Note 1: All typicals are at V_{CC} = 5V, T_A = 25°C.

Note 2: Not more than one output should be shorted at a time, and the duration should not exceed one second.

Note 3: I_{CC1} is measured with the outputs open, STROBE grounded, and all other inputs at 4.5V.

Note 4: I_{CC2} is measured with the outputs open and all inputs at 4.5V.

Switching Characteristics at V_{CC} = 5V and T_A = 25°C (See Section 1 for Test Waveforms and Output Load)

Symbol	Parameter	From (Input) to (Output)	R_L = 667Ω				Units
			C_L = 45 pF		C_L = 150 pF		
			Min	Max	Min	Max	
t_{PLH}	Propagation Delay Time Low to High Level Output	A, B, C (4 Levels) to Y		45		53	ns
t_{PHL}	Propagation Delay Time High to Low Level Output	A, B, C (4 Levels) to Y		45		53	ns
t_{PLH}	Propagation Delay Time Low to High Level Output	A, B, C (3 Levels) to W		33		38	ns
t_{PHL}	Propagation Delay Time High to Low Level Output	A, B, C (3 Levels) to W		33		42	ns
t_{PLH}	Propagation Delay Time Low to High Level Output	D to Y		28		35	ns
t_{PHL}	Propagation Delay Time High to Low Level Output	D to Y		28		38	ns
t_{PLH}	Propagation Delay Time Low to High Level Output	D to W		15		25	ns
t_{PHL}	Propagation Delay Time High to Low Level Output	D to W		15		25	ns
t_{PZH}	Output Enable Time to High Level Output	Strobe to Y		45		60	ns
t_{PZL}	Output Enable Time to Low Level Output	Strobe to Y		40		51	ns
t_{PHZ}	Output Disable Time from High Level Output (Note 1)	Strobe to Y		45			ns
t_{PLZ}	Output Disable Time from Low Level Output (Note 1)	Strobe to Y		25			ns
t_{PZH}	Output Enable Time to High Level Output	Strobe to W		27		40	ns
t_{PZL}	Output Enable Time to Low Level Output	Strobe to W		40		47	ns
t_{PHZ}	Output Disable Time from High Level Output (Note 1)	Strobe to W		55			ns
t_{PLZ}	Output Disable Time from Low Level Output (Note 1)	Strobe to W		25			ns

Note 1: C_L = 5 pF

Logic Diagram

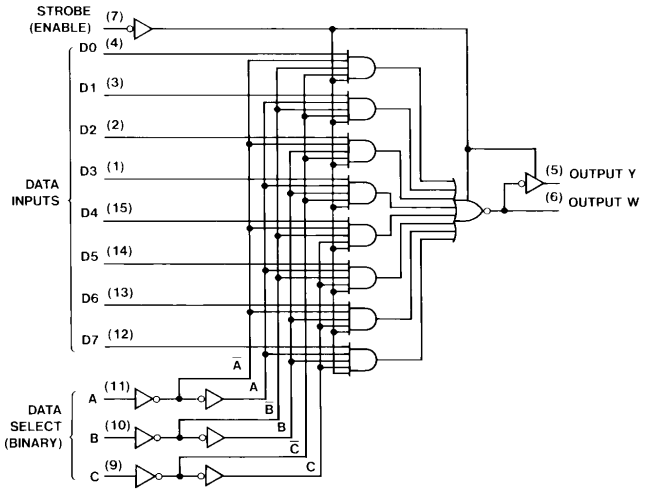

TL/F/6415–2

Physical Dimensions inches (millimeters)

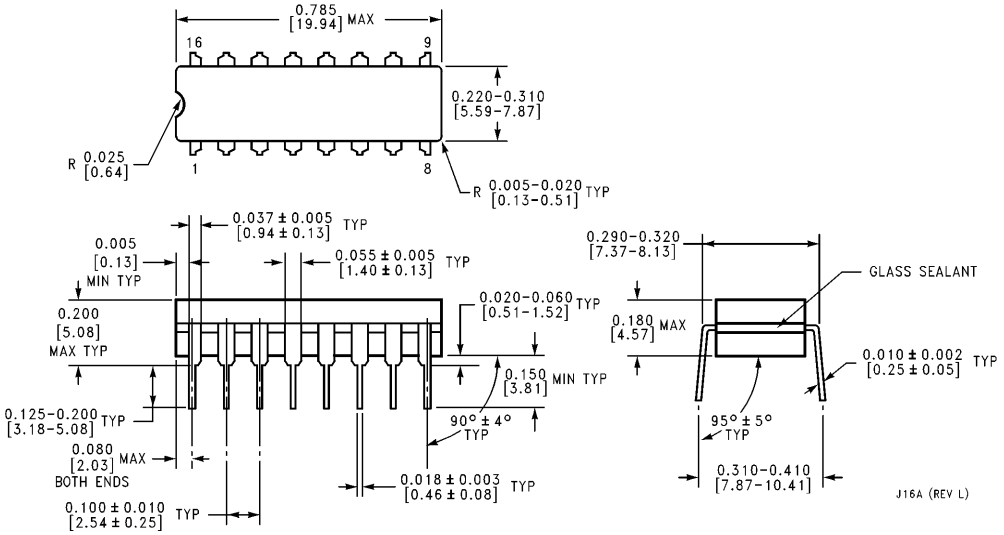

16-Lead Ceramic Dual-In-Line Package (J)
Order Number DM54LS251J
NS Package Number J16A

Physical Dimensions inches (millimeters) (Continued)

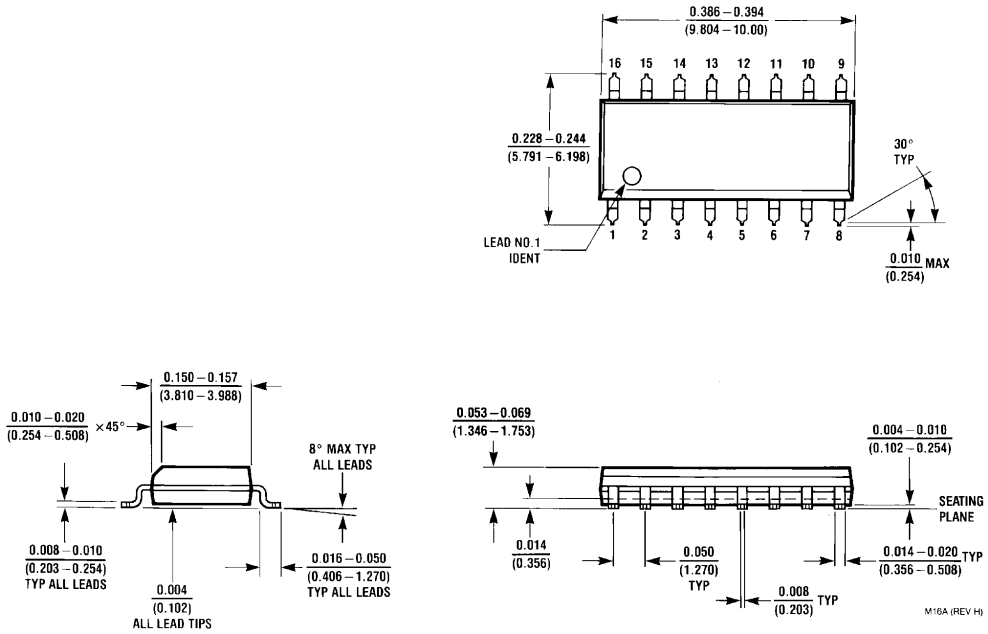

16-Lead Small Outline Molded Package (M)
Order Number DM74LS251M
NS Package Number M16A

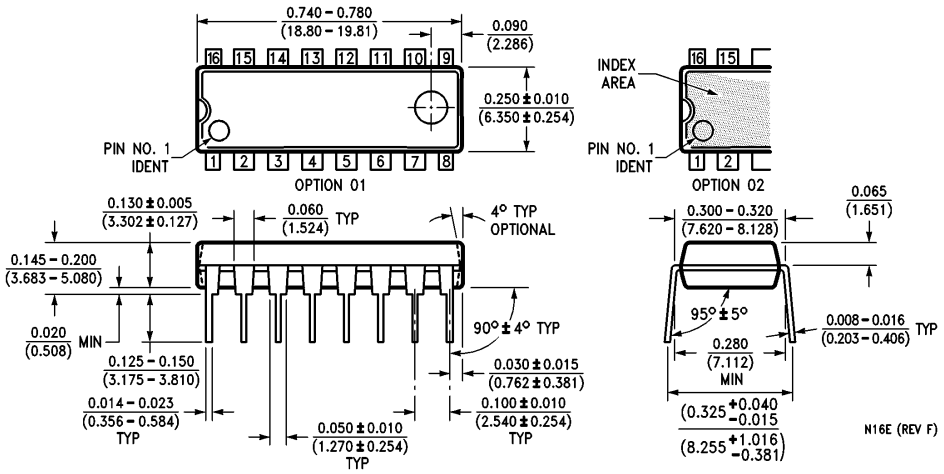

Molded Dual-In-Line Package (N)
Order Number DM74LS251N
NS Package Number N16E

Physical Dimensions inches (millimeters) (Continued)

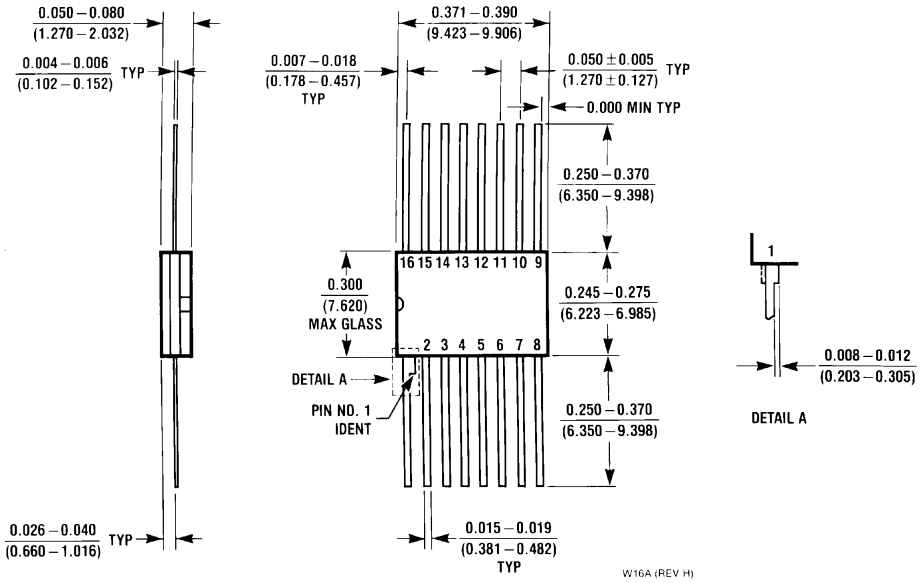

16-Lead Ceramic Flat Package (W)
Order Number DM54LS251W
NS Package Number W16A

LIFE SUPPORT POLICY

NATIONAL'S PRODUCTS ARE NOT AUTHORIZED FOR USE AS CRITICAL COMPONENTS IN LIFE SUPPORT DEVICES OR SYSTEMS WITHOUT THE EXPRESS WRITTEN APPROVAL OF THE PRESIDENT OF NATIONAL SEMICONDUCTOR CORPORATION. As used herein:

1. Life support devices or systems are devices or systems which, (a) are intended for surgical implant into the body, or (b) support or sustain life, and whose failure to perform, when properly used in accordance with instructions for use provided in the labeling, can be reasonably expected to result in a significant injury to the user.
2. A critical component is any component of a life support device or system whose failure to perform can be reasonably expected to cause the failure of the life support device or system, or to affect its safety or effectiveness.

National Semiconductor Corporation
1111 West Bardin Road
Arlington, TX 76017
Tel: 1(800) 272-9959
Fax: 1(800) 737-7018

National Semiconductor Europe
Fax: (+49) 0-180-530 85 86
Email: cnjwge@tevm2.nsc.com
Deutsch Tel: (+49) 0-180-530 85 85
English Tel: (+49) 0-180-532 78 32
Français Tel: (+49) 0-180-532 93 58
Italiano Tel: (+49) 0-180-534 16 80

National Semiconductor Hong Kong Ltd.
13th Floor, Straight Block,
Ocean Centre, 5 Canton Rd.
Tsimshatsui, Kowloon
Hong Kong
Tel: (852) 2737-1600
Fax: (852) 2736-9960

National Semiconductor Japan Ltd.
Tel: 81-043-299-2309
Fax: 81-043-299-2408

National does not assume any responsibility for use of any circuitry described, no circuit patent licenses are implied and National reserves the right at any time without notice to change said circuitry and specifications.