Jul.1.2022 Copyright 2022 HIROSE ELECTRIC CO., LTD. All Rights Reserved.
In case of consideration for using Automotive equipment / device which demand high reliability, kindly contact our sales window correspondents.

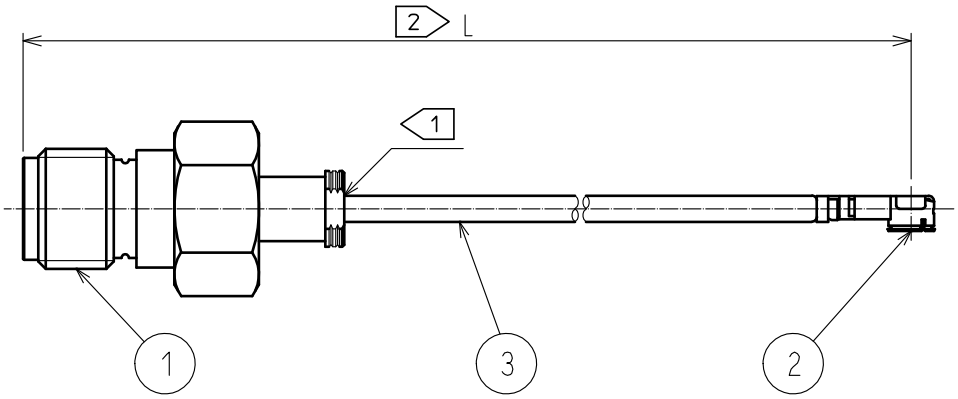

NOTE 1 Do not apply any excessive stress to the cable assembly position.

2 We indicate the length of the harness on the last of product name, 'L' part.

Tolerance for [L]

Length L [mm]	Tolerance [mm]
1 50 ≦ L ≦ 200	±4
200 < L ≦ 500	±8
500 < L ≦ 1000	±12
1000 < L	±1.5%

Part No.	Cable color
~088N1T~	GRAY
~088N2T~	BLACK
~088N3T~	WHITE

3. Specifications are subject to change without notice.

HRS DRAWING FOR REFERENCE

【DIMENSIONS OF CONNECTOR】

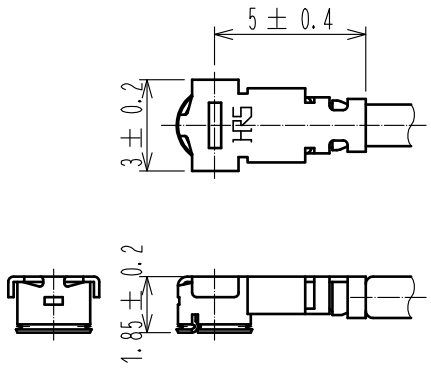

【PRECAUTIONS FOR HANDLING】

◆Connector insertion and extraction

a. Connector shall be extracted vertically by specialised extraction JIG.
Part No.:U.FL-LP-N-2(CL Code:CL331-0494-5)
Never hold the cable when extracting the cable because it damages the connector.

b. Insert the connector as perpendicularly to the mating surface as possible by aligning the mating axes of both connectors. Do not excessively slant the connectors when inserting.

◆Allowable loads on the cable after the connectors are mated.
The figures below shot the maximum allowable loads on the cable. Do not apply loads exceeding these values to the cable.

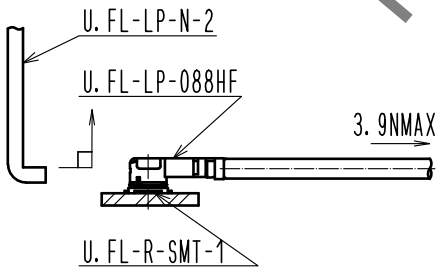

No.	PART NO.	CODE NO.	No.	PART NO.	MANUFACTURER
2	U.FL-LP-088HF(06)	CL331-0560-8-06			
1	HRM-200-088JBN(40)	CL323-0801-8-40	3	RF-MF50141	NISSEI ELECTRIC CO.,LTD.

UNITS	SCALE		COUNT	DESCRIPTION OF REVISIONS	DESIGNED	CHECKED	DATE
mm	FREE	1	1	DIS-D-00003732	NK.OOSAWA	TO.KATAYAMA	20181206

HIROSE ELECTRIC CO.,LTD.

APPROVED	: TO.KATAYAMA	20180710
CHECKED	: TO.KATAYAMA	20180710
DESIGNED	: YI.FUNADA	20180710
DRAWN	: YI.FUNADA	20180710

DRAWING NO.
PART NO. HRMJ-UFLHF6-088N*T-ALRS
CODE NO.
1 1/1

FORM HC0011-5-51