Aug.1.2022 Copyright 2022 HIROSE ELECTRIC CO., LTD. All Rights Reserved.
In case of consideration for using Automotive equipment / device which demand high reliability, kindly contact our sales window correspondents.

	COUNT	DESCRIPTION OF REVISIONS	BY	CHKD	DATE		COUNT	DESCRIPTION OF REVISIONS	BY	CHKD	DATE
△					. .	△					. .
△					. .	△					. .
△					. .	△					. .

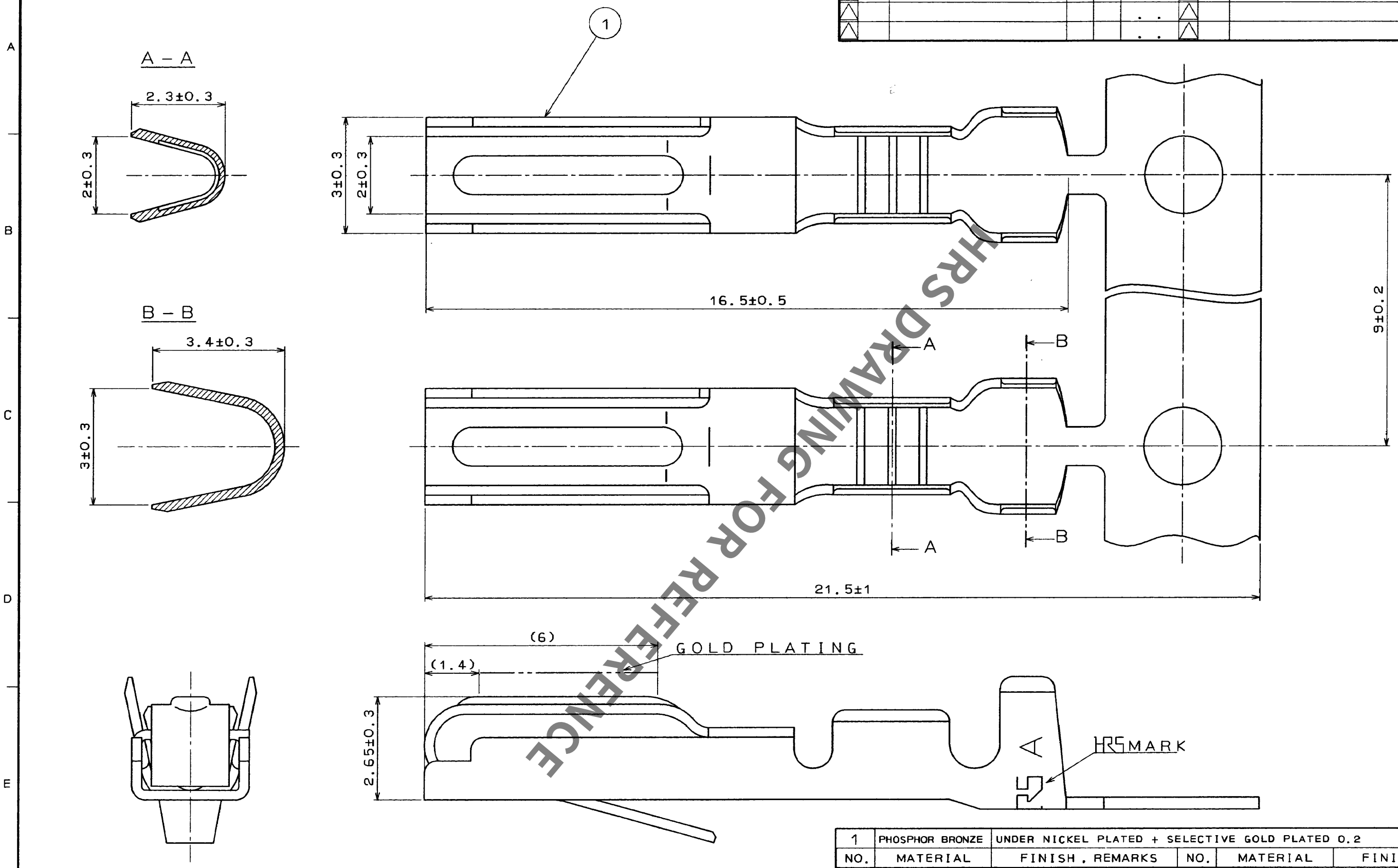

HRS DRAWING FOR REFERENCE

NOTE 1 THIS CONTACT IS APPLICABLE TO THE WIRES, 18 TO 24 AWG.

TO
Q2

NO.	MATERIAL	FINISH , REMARKS	NO.	MATERIAL	FINISH , REMARKS
1	PHOSPHOR BRONZE	UNDER NICKEL PLATED + SELECTIVE GOLD PLATED 0.2			

CODE NO. (OLD)	DRAWN	DESIGNED	CHECKED	APPROVED	RELEASED
	K. Iwaluchi '94.6.30	J. Kameya 94.7.1	H. Miwa 94.7.1	A. Nakayama 94.7.1	

SCALE 10 : 1	DRAWING NO. EDC3-010256-01	PART NO. QR/P1-PC1A-211(12)
UNITS mm	HRS HIROSE ELECTRIC CO., LTD.	CODE NO. CL221-0106-9-12 1/1

FORM No. 223