Aug.1.2022 Copyright 2022 HIROSE ELECTRIC CO., LTD. All Rights Reserved.
In case of consideration for using Automotive equipment / device which demand high reliability, kindly contact our sales window correspondents.

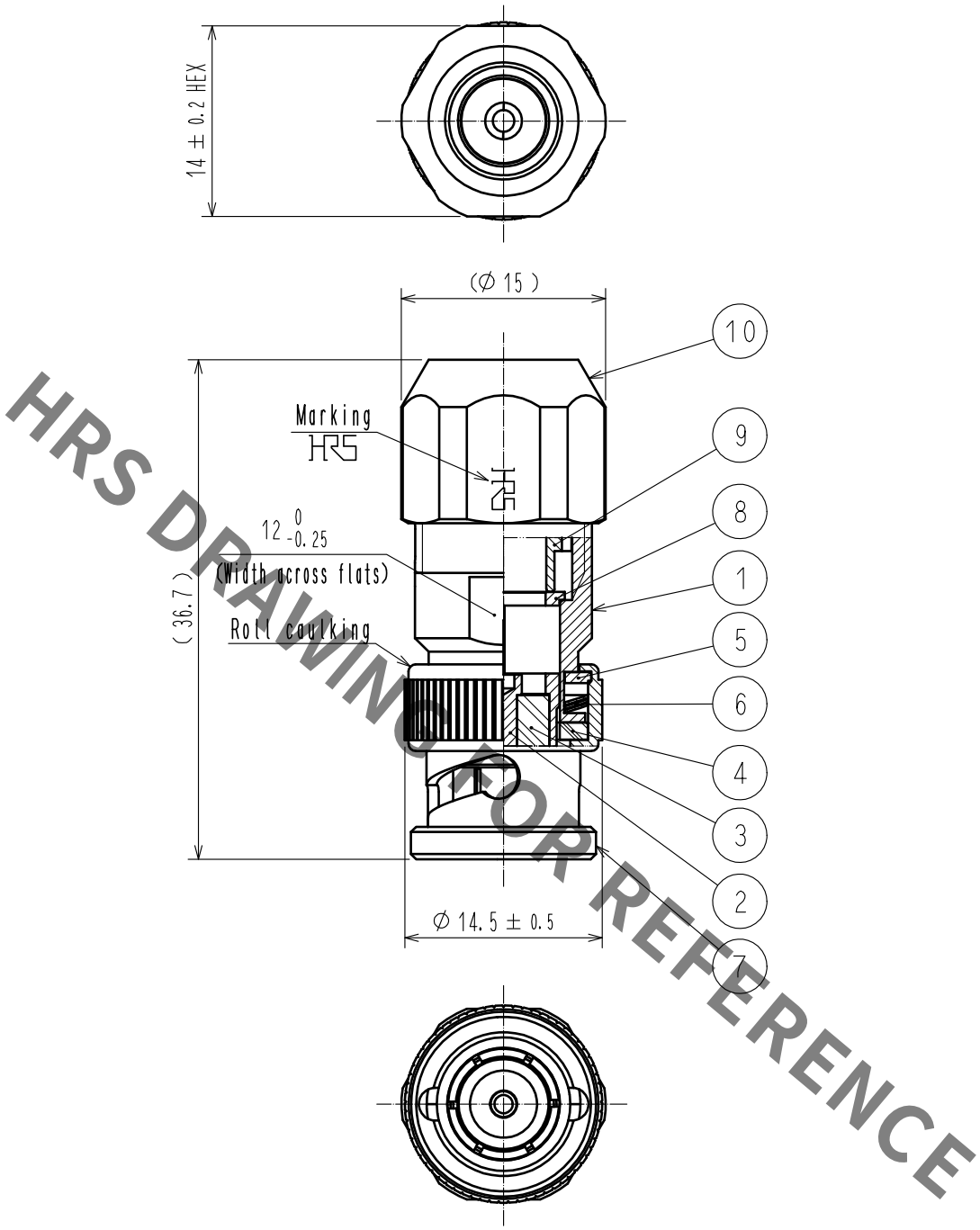

HRS DRAWING FOR REFERENCE

NO.	MATERIAL	FINISH . REMARKS	NO.	MATERIAL	FINISH . REMARKS
5	BRASS	NICKEL PLATING	10	BRASS	NICKEL PLATING
4	SILICONE RUBBER		9	BRASS	NICKEL PLATING
3	PTFE		8	BRASS	NICKEL PLATING
2	BRASS	GOLD PLATING	7	BRASS	NICKEL PLATING
1	BRASS	NICKEL PLATING	6	BERYLLIUM COPPER	SILVER PLATING

UNITS	SCALE	COUNT	DESCRIPTION OF REVISIONS	DESIGNED	CHECKED	DATE
mm	2 : 1	0				

HIROSE ELECTRIC CO., LTD.

APPROVED	: NK. NINOMIYA	20211026
CHECKED	: NK. NINOMIYA	20211026
DESIGNED	: MT. KANEKO	20211026
DRAWN	: YK. MITSUISHI	20211026

DRAWING NO. EDC-006775-42-00
PART NO. BNC-P-5DV-SA(42)
CODE NO. CL0302-0218-2-42
0 1/1

FORM HC0011-5-51