THIS DRAWING IS THE PROPERTY OF KONTEK COMATEL S.p.a. AND IT CAN NOT BE USED, REPRODUCED AND OR LOANED TO THIRD PARTIES WITHOUT THE WRITTEN PERMISSION OF KONTEK COMATEL S.p.a.

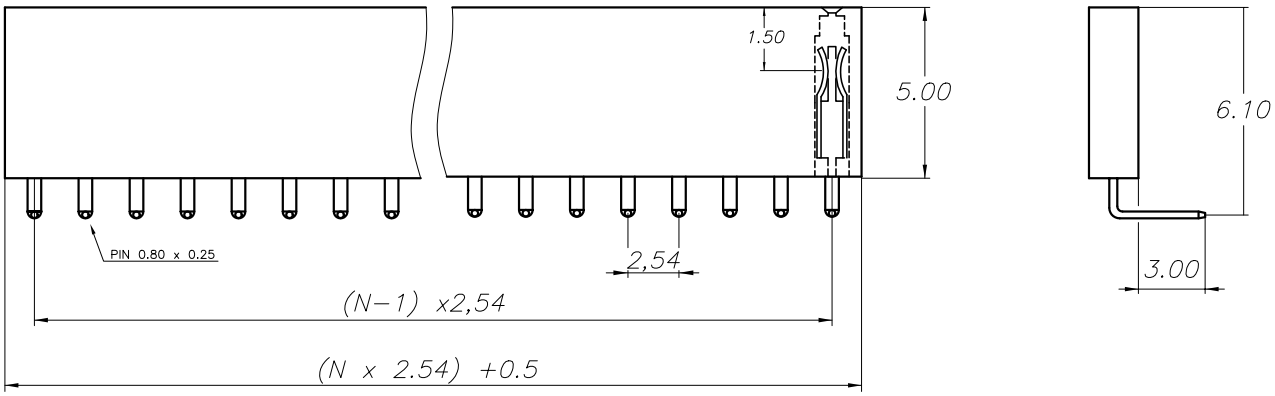

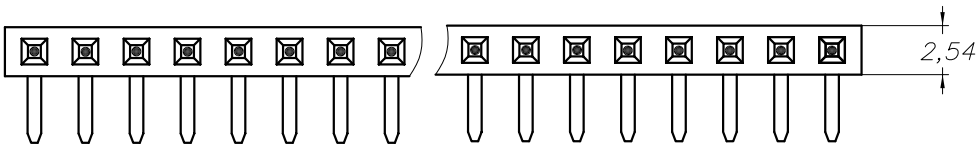

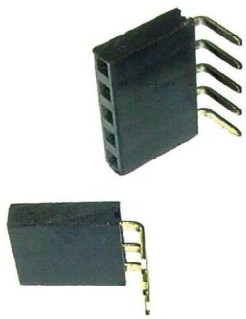

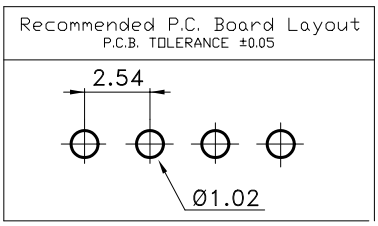

INDEX	DATE	EDIT
A	26/11/04	UPDATING

UNIT:mm
general tolerance
X ±0.25mm
XX ±0.2mm

Material: Pin: Phosphor bronze Insulator: P.B.T.

Platings: Y= 0 GOLD 0.25µm Y= 1 GOLD FLASH Y= 4 TIN PLATED Y= 7 SELECTIVE GOLD 0.25µm

Remark: XX=N= Number of contacts (03÷40)

Date 16−12−03

Design Pandiscia M

Contr. Chiappini R.

KONTEK COMATEL
ELECTRONIC CONNECTORS MANUFACTURING

Denomination: FEMALE HEADER, RIGHT ANGLE, PLASTIC HEIGHT 5mm, pitch 2.54mm.

Cod. 47797191XX4Y0

File: 47797191XX4Y0

index

Dis. Nr. A

QUESTO DISEGNO E' DI PROPRIETA' DELLA KONTEK COMATEL S.p.a. E NON PUO' ESSERE USATO, E/O CEDUTO A TERZI SENZA IL PERMESSO SCRITTO DELLA KONTEK COMATEL S.p.a.