.100"c.l. Socket Strips - Straight

FastBall Delivery 3/5 Days to You!

High Temp

.100"

☐ SSHS-1☐☐-☐-☐☐-☐-☐☐-☐☐-☐☐☐

H	High Temp.
Pins per row	01-50
Singles	S
Doubles	D

Lead Style Options

"L"ength	"T"ail	
(11,05) .435	(2,54) .100	02
(11,56) .455	(3,05) .120	04
(13,34) .525	(4,83) .190	06
(18,42) .725	(9,91) .390	08
(22,73) .895	(14,22) .560	10

(Metric Dimensions)

Low Insertion (Not available in Tin Plating) L

Plating Options

G = 10μ in gold in contact area, gold flash on tail	G
GT = 10μ in gold in contact area, 200μ in tin/lead on tail	GT
H = 30μ gold on contact area, 200μ in tin/lead on tail	H
T = 200μ in tin/lead over entire pin	T

Other plating options available upon request

Lock Tight Option LT
Two tails per strip are crimped in opposing directions on or near the centerline. Must have a minimum tail dimension of .090". Recommendeds hole size of .040".

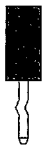

Position for Polarization Option 001-100

EXAMPLE: To order a single row 50 position socket strip with a tail length of .190" and tin plating, the part number is **SSHS-150-S-06-T**.

EXAMPLE: To order a high temperature, double row 40 position socket strip with a .390" tail, the lock tight feature, and gold plating the part number is **HSSHS-140-D-08-G-LT**.

Mates with: TSHS, TSHR, TSHC, BSTS, BSTC, TSCHRE, LTSHR, LTSHRE, BSTCM, LTSHCRE, TSHRE, TSHSM, TSHCR,

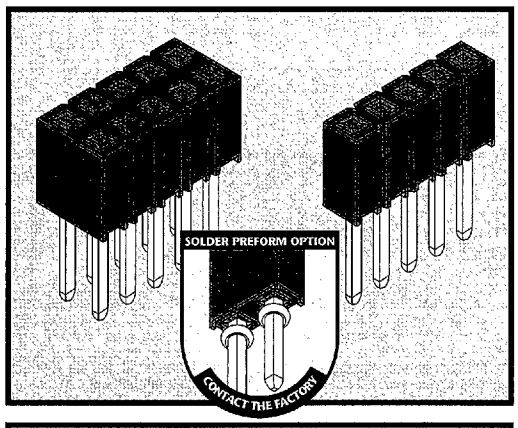

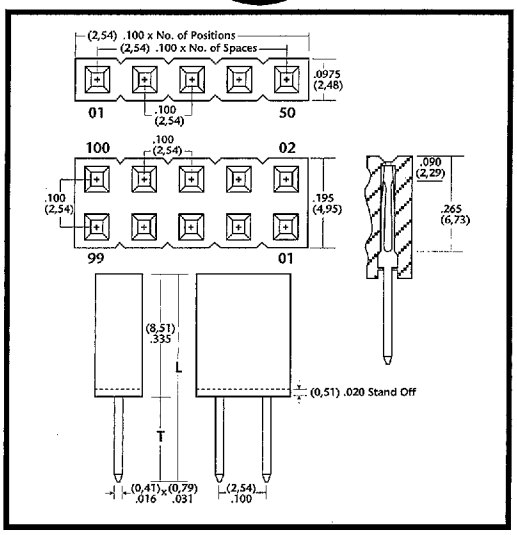

APPLICATION

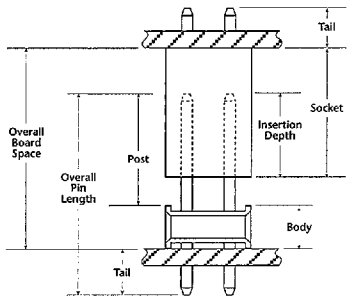

SSHS Socket plugged into a TSHS Header

Product cut to specific sizes is noncancellable/nonreturnable.
Parts are subject to change without notice.

Materials & Performance Specifications

	STANDARD	HIGH TEMPERATURE
Insulator	Black, glass filled, polyester	High temperature thermoplastic
Terminal	Phosphor Bronze	Phosphor Bronze
Insulation Resistance	5,000M Ω minimum	5,000M Ω minimum
Flammability	UL 94V-O	UL 94V-O
Temperature Range	-65°C to +125°C	-65°C to +250°C
Current Rating	1 ampere	1 ampere
Plating	All Plating Options over 50μ in Ni	All Plating Options over 50μ in Ni

Delivery On Time...Every Time...Or The Order's Free!

D 24F 9019296 0000024 2T7

Phone: 812-944-7244 • Facsimile: 812-944-7268 • Email: mle@iglou.com