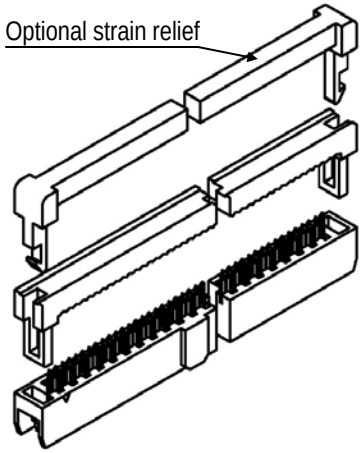

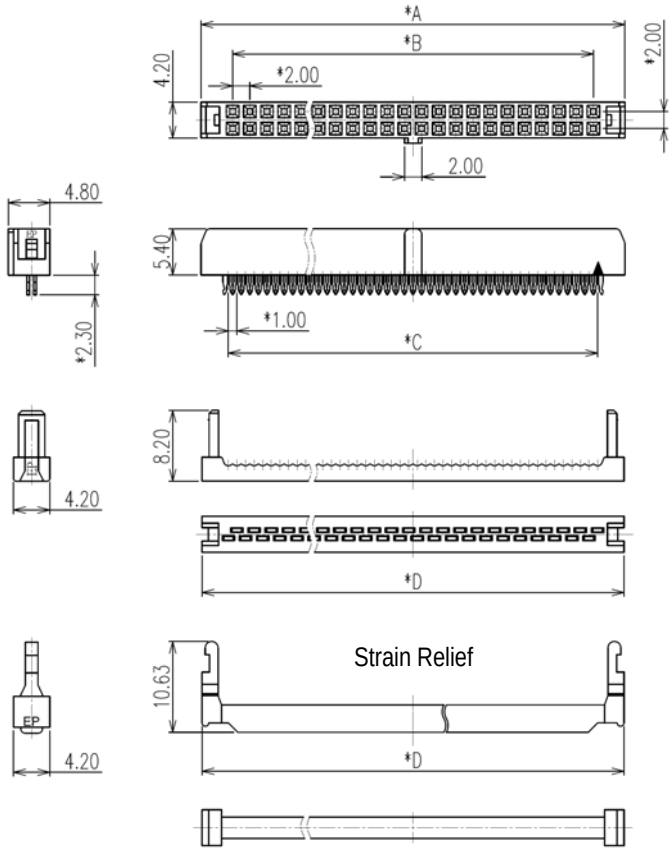

Dimensions				
Item	A	B	C	D
06	11.34	4.00	5.00	11.14
08	13.34	6.00	7.00	13.14
10	15.34	8.00	9.00	15.14
12	17.34	10.00	11.00	17.14
14	19.34	12.00	13.00	19.14
16	21.34	14.00	15.00	21.14
18	23.34	16.00	17.00	23.14
20	25.34	18.00	19.00	25.14
22	27.34	20.00	21.00	27.14
24	29.34	22.00	23.00	29.14
26	31.34	24.00	25.00	31.14
28	33.34	26.00	27.00	33.14
30	35.34	28.00	29.00	35.14
34	39.34	32.00	33.00	39.14
36	41.34	34.00	35.00	41.14
40	45.34	38.00	39.00	45.14
44	49.34	42.00	43.00	49.14
50	55.34	48.00	49.00	55.34
60	65.34	58.00	59.00	65.14
64	69.34	62.00	63.00	69.14
68	73.34	66.00	67.00	73.14

SPECIFICATIONS

Current rating:	1 amp
Contact material:	Brass, phosphor bronze
Contact plating:	Gold flash over nickel
Housing material:	PBT +30% glass fiber, UL94V-0
Insulation resistance:	1,000 megohms min.
Withstanding:	500VAC for 1 min.

Series	Positions	Polarization	Plating
BFC	XX	X	XX
IDC socket, 2mm pitch	See chart	P=Polarized NP=Not polarized	TN=Tin SGXX=Selective gold GDXX=Gold XX=Flash if blank; 3, 5, 10, 15, 30µ" gold

Series	Positions
BSR	XX
2mm Strain Relief	See Chart

RoHS compliant

Rev.	Description	Date	Approved

Drawing	Name	Date
Approved	Howard	05/22/07
Checked	Lizzy	05/22/07
Drawn	Tina	05/22/07

0.0 ± 0.35 0.00 ± 0.20 Angles ± 3'

UNIT: mm

Central Components Manufacturing
440 Lincoln Blvd., Middlesex, New Jersey 08846
Phone 732 469-5720 888 288-5152 Fax 732 469-1919

Part No.: **BFC-XX-P-XX**

Description: IDC socket, 2mm pitch, with polarization