.100"c.l. Board Stacker Terminal Strips-Custom

FastBall Delivery 3/5 Days to You!

High Temp

☐ BSTC-1 ☐☐-☐-☐☐☐-☐☐-☐☐-☐☐☐-☐☐-☐☐☐

Mates with: SSHS, SSHR, SH, BSSH, BSSQ, BSSHC, SSHSM, SSHQ, SSHQR

H High Temp.	
Pins per row	01-50
Singles	S
Doubles	D
Custom Tail Length	

Lead Style Chart

Length	
(10,92) .430	06
(11,30) .445	08
(11,58) .456	10
(13,46) .530	14
(16,00) .630	16
(18,54) .730	20
(21,08) .830	22
(23,62) .930	24
(26,16) 1.030	26
(28,70) 1.130	28
(31,24) 1.230	30
(33,78) 1.330	32
(36,32) 1.430	34
(38,86) 1.530	36

(Metric Dimensions)

Plating Options

G = 10μ in gold in contact area, gold flash on tail	G
GT = 10μ in gold in contact area, 200μ in tin/lead on tail	GT
H = 30μ gold on contact area, 200μ in tin/lead on tail	H
T = 200μ in tin/lead over entire pin	T

Other plating options available upon request

Board Space

Lock Tight Option LT

Two tails per strip are crimped in opposing directions on or near the centerline. Must have a minimum tail dimension of .090". Recommended hole size of .040".

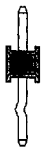

Position for Polarization Option 001-100

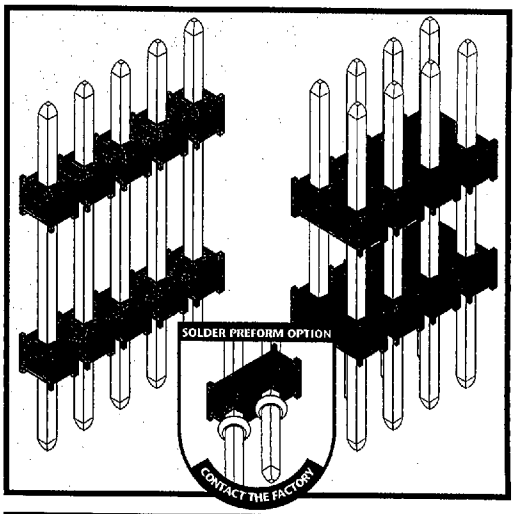

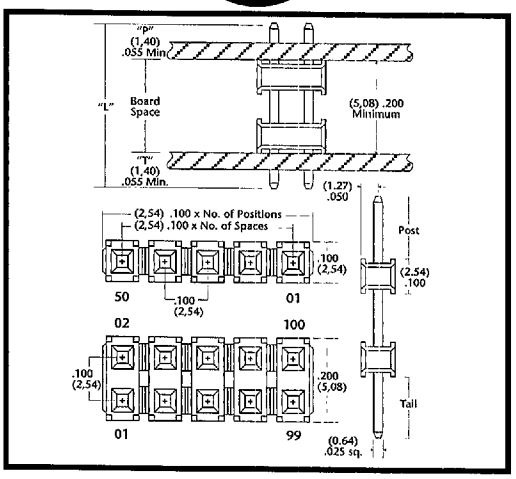

APPLICATION

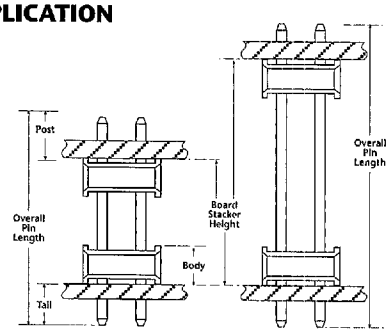

Custom Board Stackers

Product cut to specific sizes is noncancellable/nonreturnable.
Parts are subject to change without notice.

Materials & Performance Specifications

	STANDARD	HIGH TEMPERATURE
Insulator	Black, glass filled, polyester	High temperature thermoplastic
Terminal	Phosphor Bronze	Phosphor Bronze
Insulation Resistance	5,000M Ω minimum	5,000M Ω minimum
Flammability	UL 94V-O	UL 94V-O
Temperature Range	-65°C to +125°C	-65°C to +250°C
Current Rating	3 ampere	3 ampere
Plating	All Plating Options over 50μ in Ni	All Plating Options over 50μ in Ni

Delivery On Time, Every Time...Or The Order's Free!

Telephone: 812-944-7244 • Facsimile: 812-944-7268 • Email: mle@iglou.com