CMOS Voltage Regulators

R×5RL Series Voltage Regulator

The R×5RL series are CMOS voltage regulator ICs with high accuracy output voltage and ultra low quiescent current. Each model consists of a voltage reference unit, an error amplifier, a driver transistor, and resistors for setting output voltage.

Features

- ultra-low quiescent current ····· TYP. 1.1μA (R×5RL30A, V_{IN}=5.0V)
- small dropout voltage ····· TYP. 30mV (R×5RL50A, I_{OUT} = 1mA)
- stepwise setting with a step of 0.1V in the range of 2.0V to 6.0V of output voltage is possible
- high accuracy output voltage ····· ±2.5%
- low temperature drift coefficient of output voltage ····· TYP. ±100ppm/°C
- excellent line regulation ····· Typ. 0.1%/V
- three types of packages ····· RE5RL ····· TO-92
  RH5RL ····· SOT-89
  RN5RL ····· SOT-23-5

Block Diagram

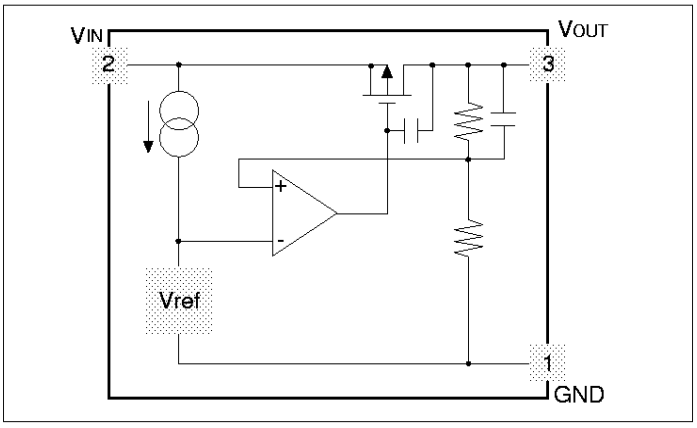

Typical Characteristics R×5RL50A

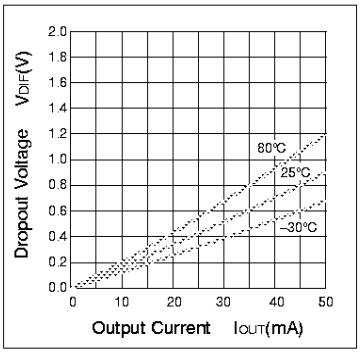

Typical Circuit Configuration

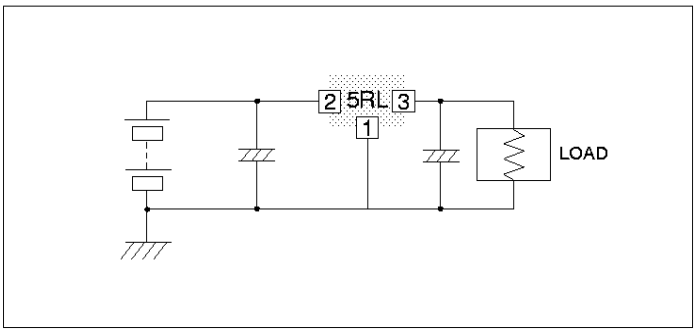

Packages

RE5RL	RH5RL	RN5RL
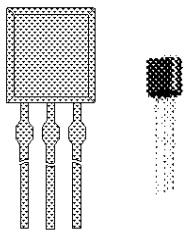	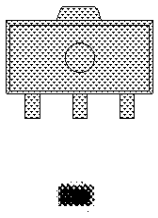	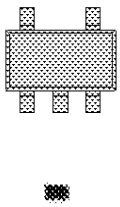

Applications

- power source for battery-powered equipment
- power source for cameras, video equipment such as camcorders and VCRs, and hand-held communication devices
- precision voltage references