REV.	DESCRIPTION	DATE

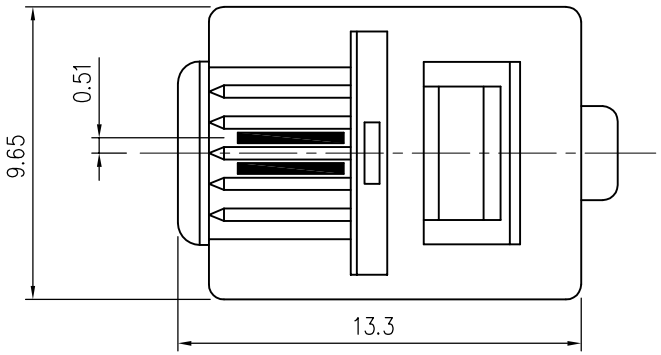

NOTE:

A. Material:
1. Housing : PC , UL94V-2.
2. Terminal : Copper Alloy.

B. Plating:
1.Terminal : Plating is based on 50u" Nickel Under Plating.
Selective Gold Plated on Contact Touch Area.

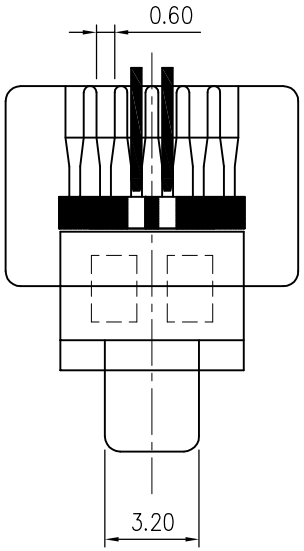

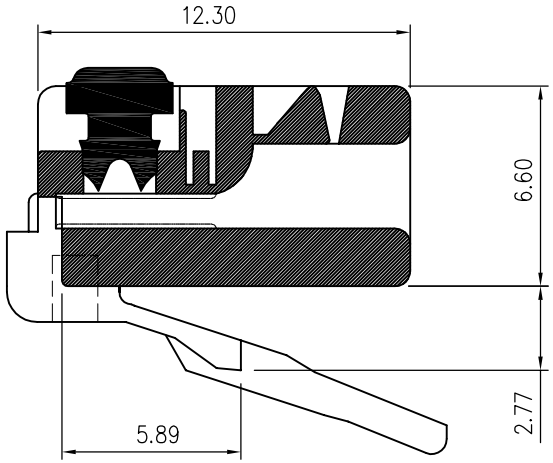

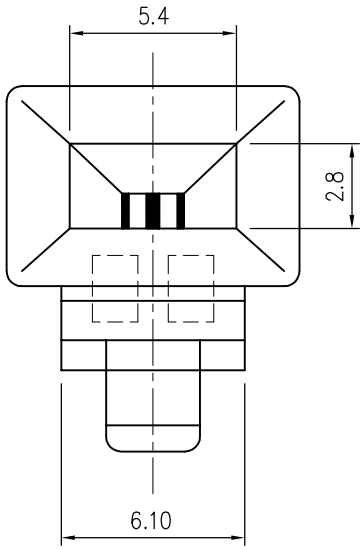

Flat Cable

TREMINAL / CABLE	2 Prongs For Stranded Wire 多芯線用二叉金片	2 Prongs For Solid Wire 單芯線用二叉金片	3 Prongs For Solid Wire 單芯線用三叉金片
Flat Cable	MOD-621-F-XXu"		MOD-623-F-XXu"
Round Cable			

TOLERANCE
.X ±0.250
.XX ±0.150
.XXX±0.100

UNITS : mm

SCALE 4 : 1

DRAWER Chin Chun Liu
CHECK Shi Tung Liu
DESIGNED Chin Chun Liu
APPROVAL Haw Feng Liu
DATE 06 / 23 / 2000
SIZE A4

SunLight 日亮電子科技有限公司
Sun-Light Electronic Technologies Inc.

NAME
Modular Plug RJ9 6P2C
Flat Cable.

PART NO. 請參照左表
DRAW NO. MOD-62X
SHEET 1 OF 1
REV. A