NOTES:
1. MATERIAL:
   1.1 HOUSING: THERMOPLASTIC, HIGH TEMP., UL94V-0;
   1.2 CONTACT: COPPER ALLOY
   1.3 FITTING NAIL: COPPER ALLOY
2. FINISH:
   2.1 CONTACT:
      50u" MIN. NICKEL UNDERPLATING OVERALL.
      L: 80~120u" PURE TIN(BRIGHT) PLATING ALL OVER
      1: Gold Flash overall.
      N: 120u" MIN. Pure Tin(MATT TIN) OVER ALL.
   2.2 FITTING NAIL:
      50u" MIN. NICKEL UNDERPLATNG OVERALL.
      L: 80~120u" PURE TIN(BRIGHT) PLATING ALL OVER
      1: Gold Flash overall.
      N: 120u" MIN. Pure Tin(MATT TIN) OVER ALL.
3. REFLOW SOLDER CAPABLE TO 260°C PER ACES SPEC.
4. SPEC. PLS. REFER TO PS-88060-xxxx.
5. PACKAGING REFER TO 87058-XXXXX-TRP.

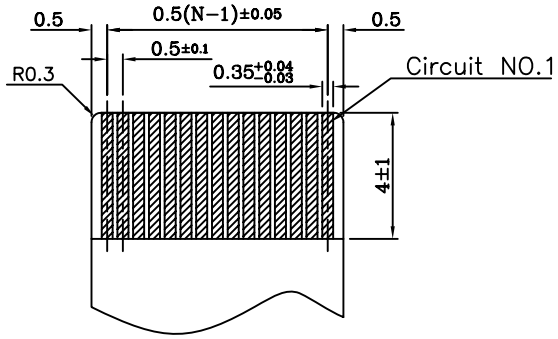

RECOMMENDED APPLICABLE FPC LAYOUT
(THICKNESS:0.3±0.03)

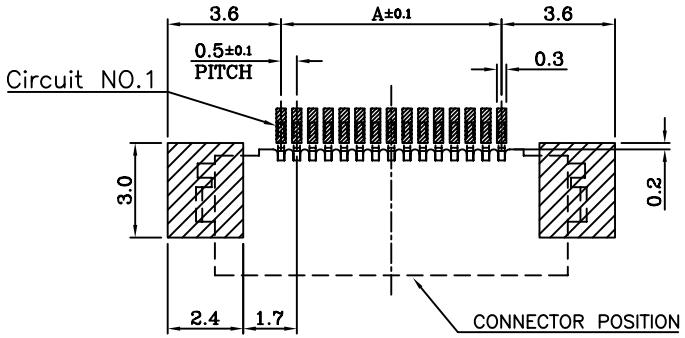

PCB PATTERN LAYOUT

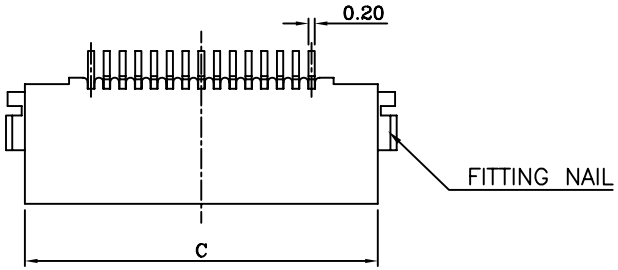

P/N LEGEND
87058- XXX X X

No Of Contact

Packing
0:Tape & Reel
1:Tube Package

Plating
L:PURE TIN(lead free)
1:G/F over all(lead free)
N:MATT TIN(lead free)

CKT	Dim A	Dim B	Dim C
4	1.5	2.6	5.7
5	2.0	3.1	6.2
6	2.5	3.6	6.7
7	3.0	4.1	7.2
8	3.5	4.6	7.7
9	4.0	5.1	8.2
10	4.5	5.6	8.7
11	5.0	6.1	9.2
12	5.5	6.6	9.7
13	6.0	7.1	10.2
14	6.5	7.6	10.7
15	7.0	8.1	11.2
16	7.5	8.6	11.7
17	8.0	9.1	12.2
18	8.5	9.6	12.7
19	9.0	10.1	13.2
20	9.5	10.6	13.7
21	10.0	11.1	14.2
22	10.5	11.6	14.7
23	11.0	12.1	15.2
24	11.5	12.6	15.7
25	12.0	13.1	16.2
26	12.5	13.6	16.7
27	13.0	14.1	17.2
28	13.5	14.6	17.7
29	14.0	15.1	18.2
30	14.5	15.6	18.7
31	15.0	16.1	19.2
32	15.5	16.6	19.7

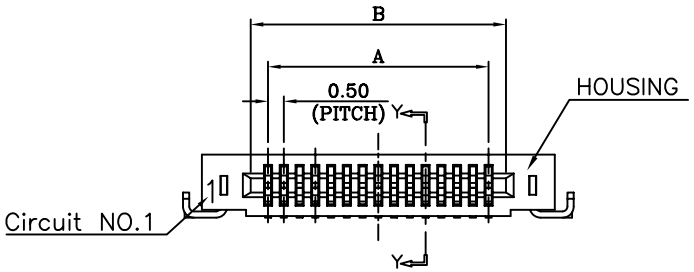

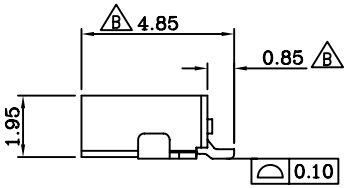

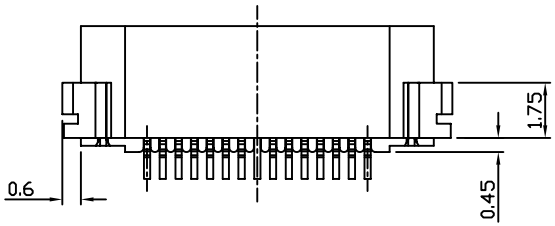

REV	修訂 REVISION DESCRIPTION	日期 DATE	申請人 SIGNATURE
B	A1版發行(ECN-0810135)	'08/10/23	huamin
A	無鉛電子使用TYPE(ECN-0807004)	'08/07/15	huamin
0	0版發行(ECN-0804039)	'08/04/09	huamin

一般公差
TOLERANCES
X. ±0.5 .XX ±0.15
.X ±0.25 .XXX ±0.1
ANGLES ±2°

檢驗尺寸標示
SYMBOLS CR MA INDICATE CLASSIFICATION DIMENSION
CR MARK IS CRITICAL DIM.
MA MARK IS MAJOR DIM.

表面處理 (FINISH)

宏致電子股份有限公司
Aces Electronic Co.,Ltd.

品名 (TITLE) 0.5mm NON ZIF FPC CONN. SMT R/A TYPE

圖號 (DWG.NO) 87058-XXXXX

製圖 (DR) '07/12/10 huamin
審核 (CHKD) WGCH
核准 (APPD) JASON

比例 (SCALE) 4:1 | 單位 (UNITS) mm | 張數 (SHEET) 1 OF 1 | SIZE A4 | REV B