File No.	286	SHEET 1 / 1

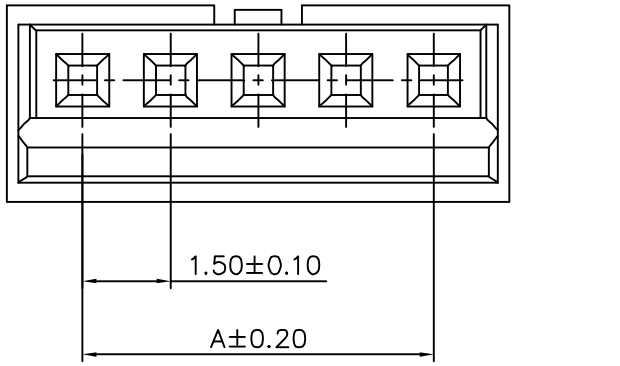

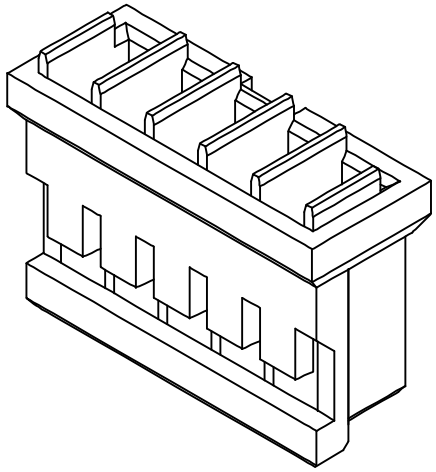

SPECIFICATIONS

Current Rating: 1A AC, DC
Voltage Rating: 100V AC, DC
Withstanding Voltage: 500V AC/Minute
Contact Resistance: 20 Milliohms Max.
Insulation Resistance: 500Megohms Min.
Temperature Range: −25°C to +85°C
Material: Nylon66, UL94V−0

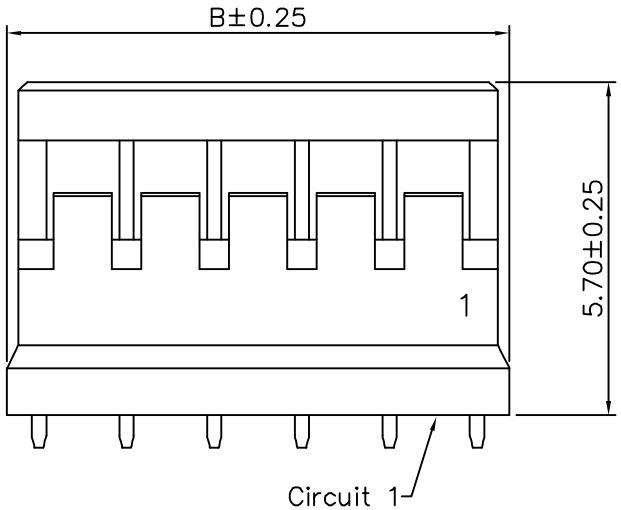

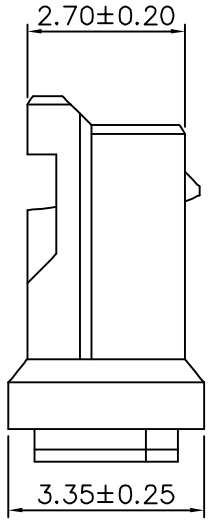

Poles	A	B
2	1.50	4.10
3	3.00	5.60
4	4.50	7.10
5	6.00	8.60
6	7.50	10.10
7	9.00	11.60
8	10.50	13.10
9	12.00	14.60
10	13.50	16.10
11	15.00	17.60
12	16.50	19.10
13	18.00	20.60
14	19.50	22.10
15	21.00	23.60

A MEMBER OF AUK GROUP
太聯事業股份有限公司
AUK CONTRACTORS CO., LTD.

CATEGORY	Housing	APPROVED BY	MEI
PART NO.	MZXXH	CHECKED BY	BECKY
DRAWING No.	MZXXH	DRAWING BY	HZF
SCALE	NONE	REV.	A0

UNLESS OTHERWISE SPECIFIED TOLERANCES ARE
.X ±0.38
.XX ±0.25
ANG.
UNIT mm

NO.	REV.	REVISIONS	CHK	DATE
0	A0	NEW RELEASE		