Dual Channel

T-41-85

General Purpose

Part Number	Features	Current Transfer Ratio I_F = 10mA MIN (%)	Isolation B'kdown Voltage V DC	Continuous Forward Current MAX (mA)	PIV LED @ 10 µA MIN (V)	BVCEO @ 1mA MIN (V)	ICEO (Dark) VCE = 10V MAX (nA)	VCE Sat I_F = 16mA I_C = 2mA MAX (V)	Package
ISD-1	Two Isolators in one Package Independently Isolated from each other	20	2500	60	3.0	30	50	0.5 (I_C = 1.6mA)	21
ISD-5		50							
ISD-74		12.5 (I_F = 16mA)	1500			20	500 (V_{CE} = 5V)	0.5	
MCT 6 §		20	2500			30	100	0.4	

§ Replacement for ILCT6.

High Voltage, High CTR, High Sensitivity

Part Number	Features	Current Transfer Ratio I_F = 10mA MIN MAX (%)	Current Transfer Ratio I_F = 1.0mA MIN (%)	Isolation B'kdown Voltage V DC	Continuous Forward Current MAX (mA)	PIV LED @10 µA MIN (V)	BVCEO @ 1mA MIN (V)	ICEO (Dark) VCE = 10V MAX (nA)	VCE Sat I_F = 10mA I_C = 2mA MAX (V)	Package
ISD 201	Two Isolators in one Package Independently Isolated from each other	75 min.	10	5000	60	3.0	30	50	0.4	21
ISD202		125-250	30							
ISD203		225-450	50							

Quad Channel

General Purpose

Part Number	Features	Current Transfer Ratio I_F = 10mA MIN (%)	Isolation B'kdown Voltage V DC	Continuous Forward Current MAX (mA)	PIV LED @ 10 µA MIN (V)	BVCEO @ 1mA MIN (V)	ICEO (Dark) VCE = 10V MAX (nA)	VCE Sat I_F = 16mA I_C = 1.6mA MAX (V)	Package
ISQ1	Four Isolators in one Package Independently Isolated from each other	20	2500	60	3.0	30	50	0.5	22
ISQ5		50							
ISQ74		12.5 (I_F = 16mA)	1500			20	500 (V_{CE} = 5V)	0.5 (I_C = 2mA)	

High Voltage, High CTR, High Sensitivity

Part Number	Features	Current Transfer Ratio I_F = 10mA MIN MAX (%)	Current Transfer Ratio I_F = 1mA VCE = 10V MIN (%)	Isolation B'kdown Voltage V DC	Continuous Forward Current MAX (mA)	PIV LED @ 10µA MIN (V)	BVCEO @ 1mA MIN (V)	ICEO (Dark) VCE 10V MAX (nA)	VCE Sat I_F = 10mA I_C = 2mA MAX (V)	Package
ISQ201	Four Isolators in one Package Independently Isolated from each other	75 min.	10	5000	60	3.0	30	50	0.4	22
ISQ202		125-250	30							
ISQ203		225-450	50							

Photo Darlington

With Base Connection

Part Number	Features	Current Transfer Ratio I_F = 10mA MIN (%)	Isolation B'kdown Voltage V DC	Continuous Forward Current MAX (mA)	PIV LED @ 10µA MIN (V)	BV CEO @ 1mA MIN (V)	ICEO (Dark) VCE = 10V MAX (nA)	VCE Sat I_F = 8mA I_C = 2mA MAX (V)	Package
4N29	Optically Coupled Pair with Infrared Emitter and Photo Darlington Transistor	100	2500	60	3.0 (@ 100 uA)	30	100	1.0	23
4N30			1500						
4N31		50						1.2	
4N32		500	2500					1.0	
4N33			1500						
H11B1		500 (I_F = 1mA)	2500		3.0	25		1.0 [I_F = 1mA, I_C = 1mA]	
MCA2-55*		100	3550			55		1.0 [I_F = 50mA, I_C = 50mA]	
H24B1	Optically Coupled Pair with internal distance between Emitter and Detector of 4mm min. Housed in a 4 pin plastic package without base connection "G" denotes lead spread tp 10mm.	1000 (I_F = 5mA)	5300 (Peak)	60	3.0	30	100	1.0	4
H24B2		400 (I_F = 5mA)							
IS2100		1000 (I_F = 5mA)	11000 (Peak)						
IS2060		600 (I_F = 5mA)							
IS2040		400 (I_F = 5mA)							
IS2100G		1000	11000 (Peak)						30
IS2060G		600 (I_F = 5mA)							
IS2040G		400							

* REPLACEMENT FOR ILCA 2-55

Package Dimensions in inches (mm)

1

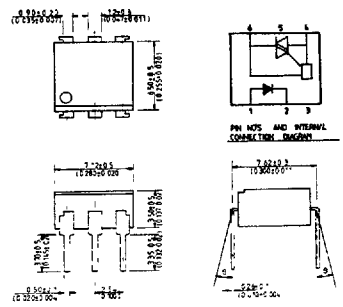

2

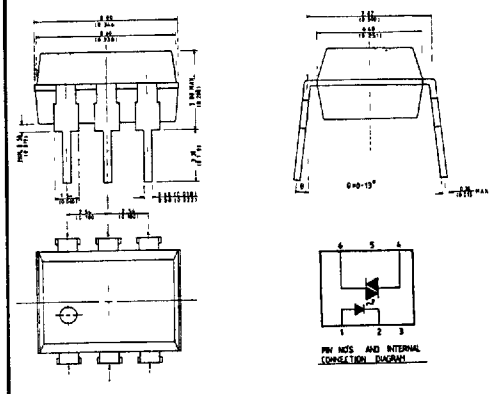

3

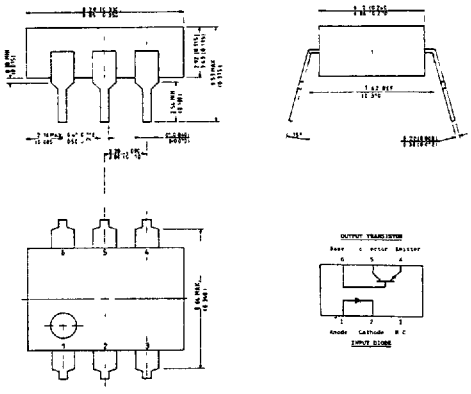

4

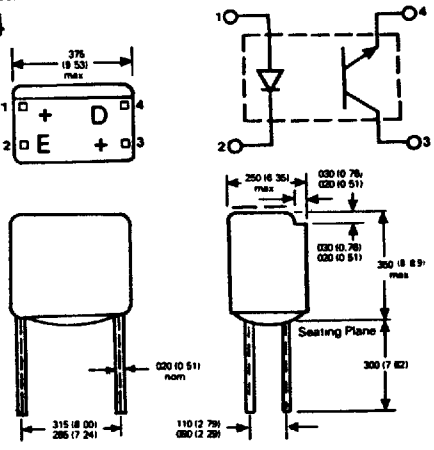

5

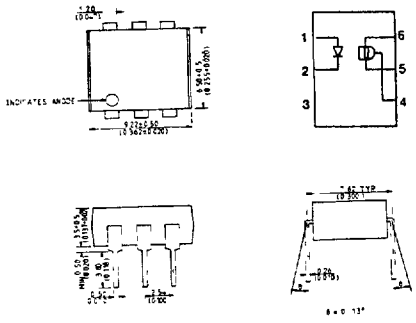

6

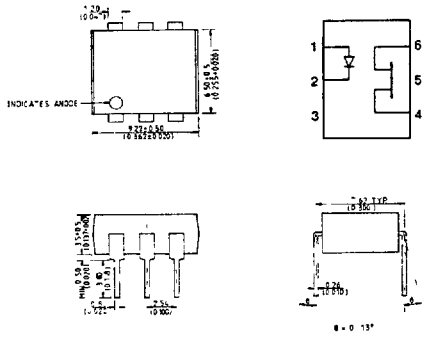

7

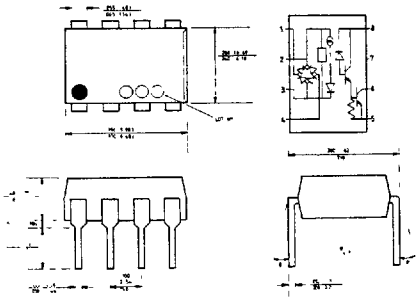

8

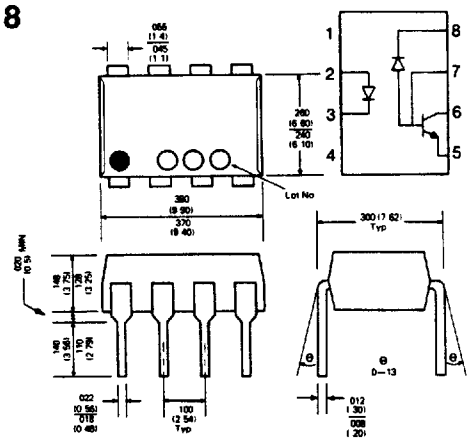

9

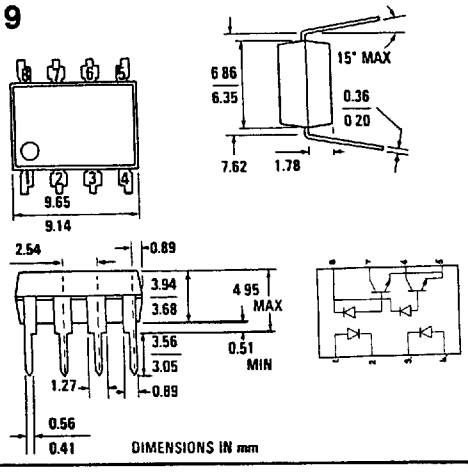

10

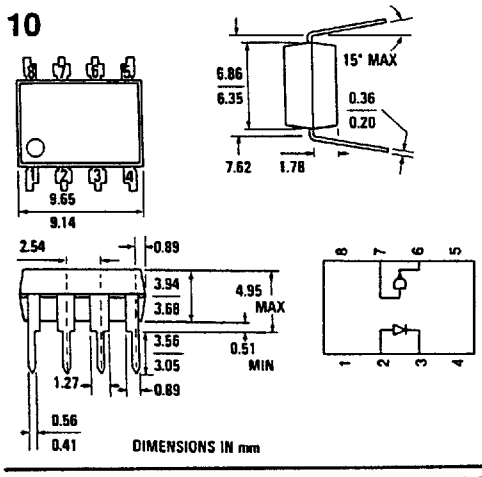

11

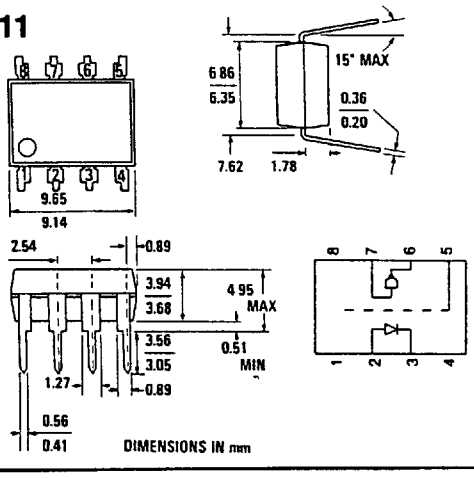

12

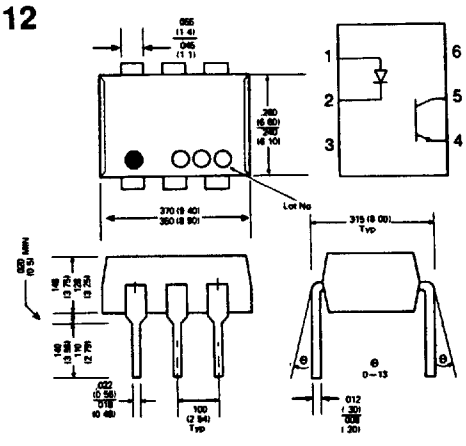

PLEASE NOTE – THESE PACKAGE DIMENSIONS ARE INTENDED ONLY AS A GUIDE, FOR ADDITIONAL INFORMATION PLEASE CONTACT ISOCOM COMPONENTS

Package Dimensions in inches (mm)

13

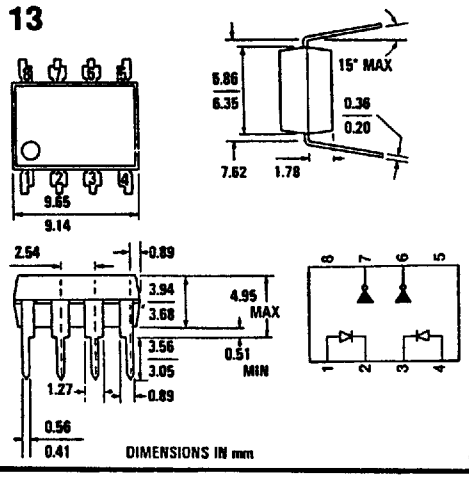

14

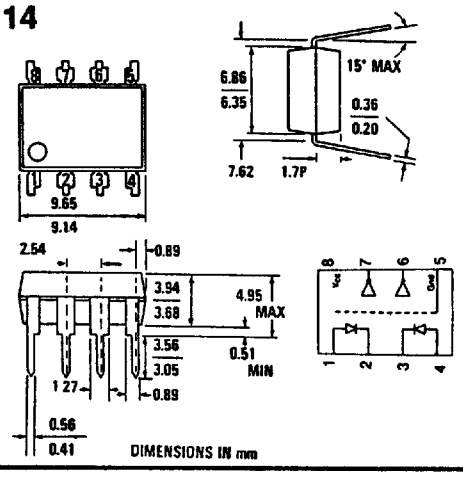

15

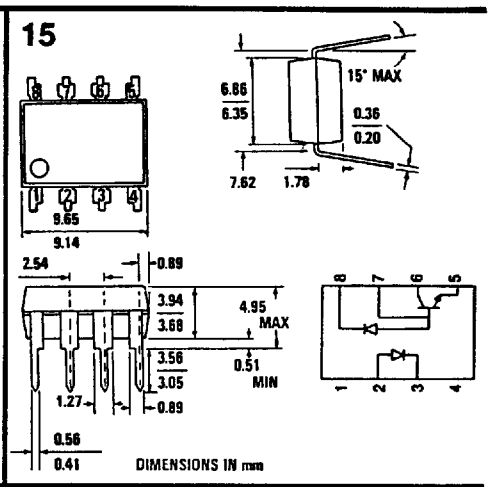

16

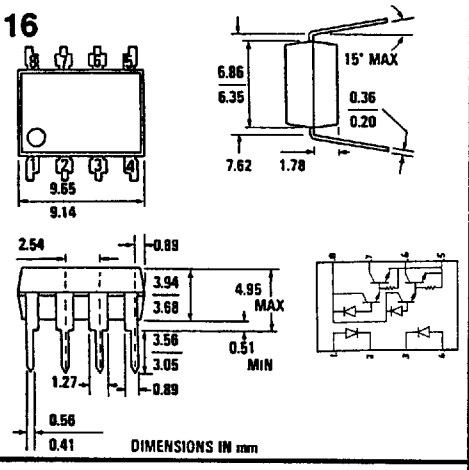

17

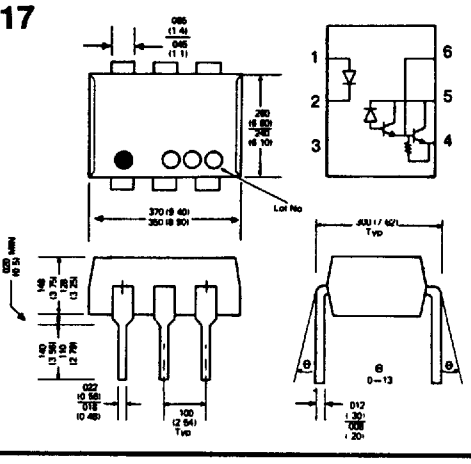

18

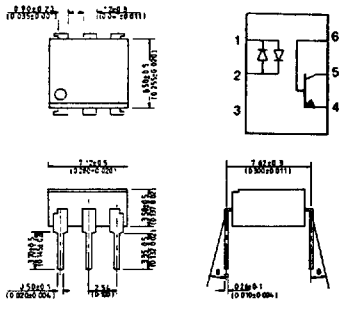

19

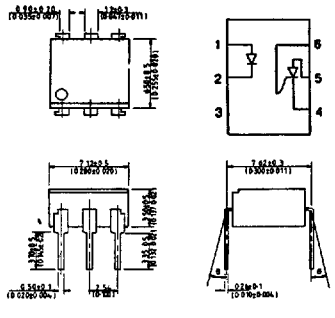

20

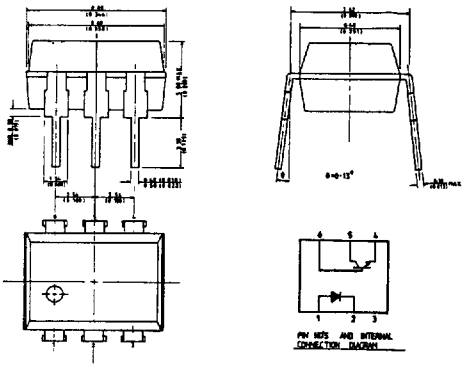

21

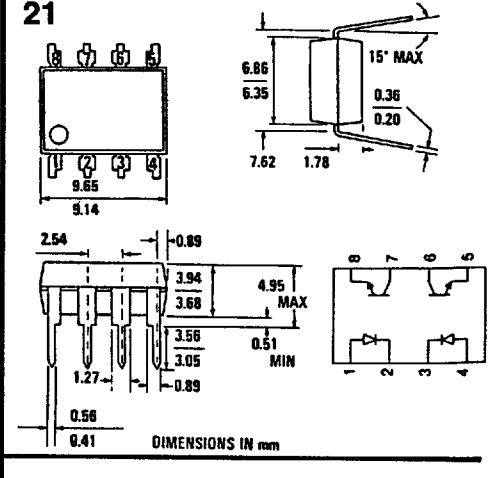

22

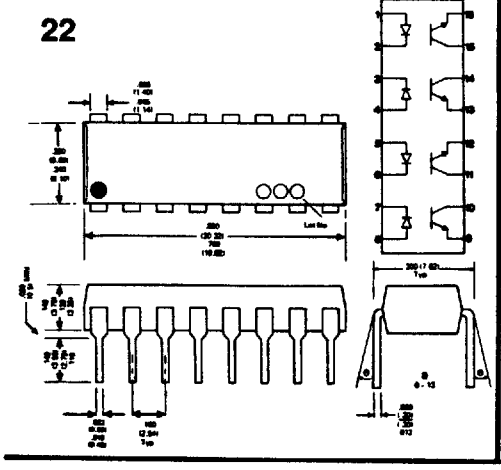

23

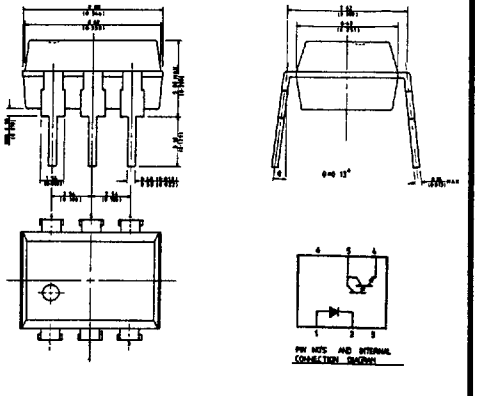

24

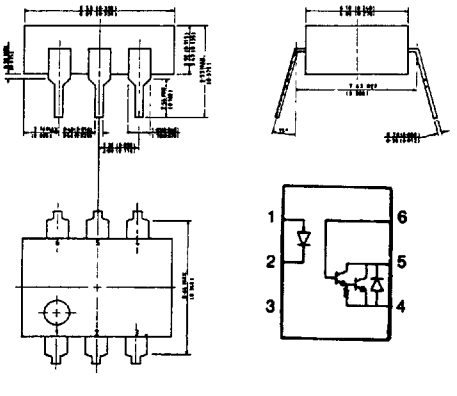

Package Dimensions in inches (mm)

25

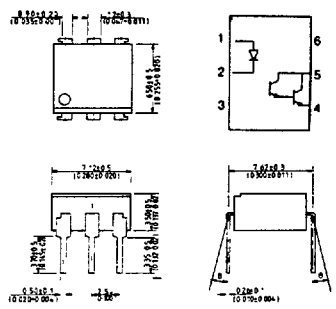

26

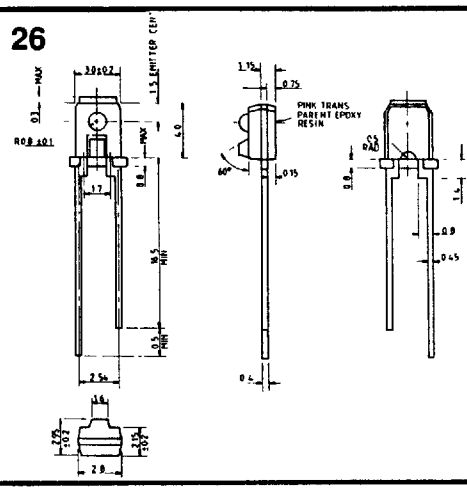

27

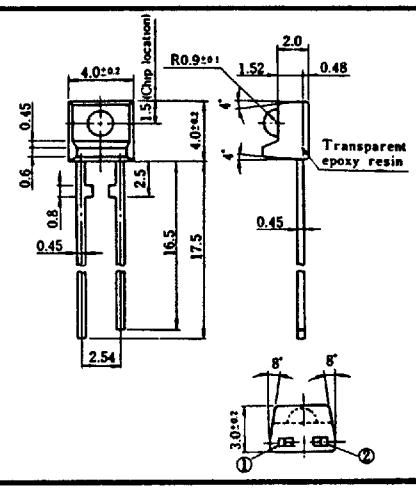

28

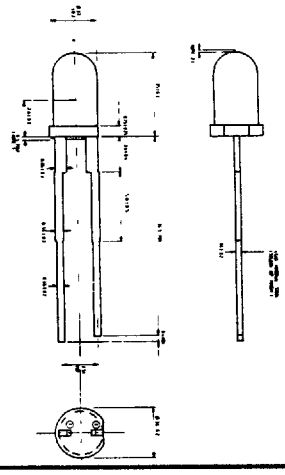

29

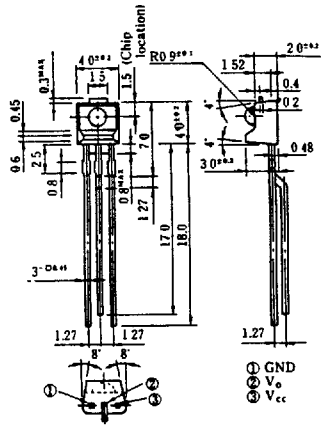

30

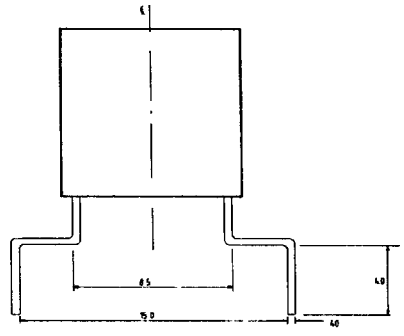

For full Package Dimensions
See Package 4

Switch Packages

NOTES: 1. Lead Spacing-1STS 100/101/200/201/ /870A-B/871A-B/H21A/H22A .320(8.13) / .290(7.37) 1STS 813X//875A-B/876A-B .230(5.84) / .210(5.33) NOTE These dimensions apply to standard products only

31

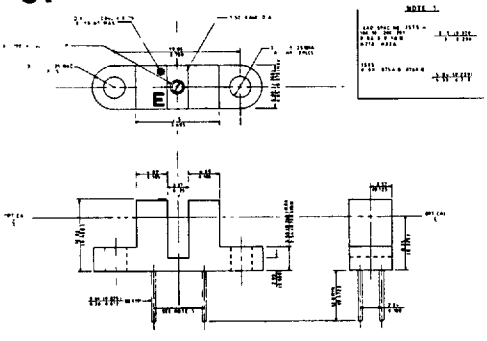

32

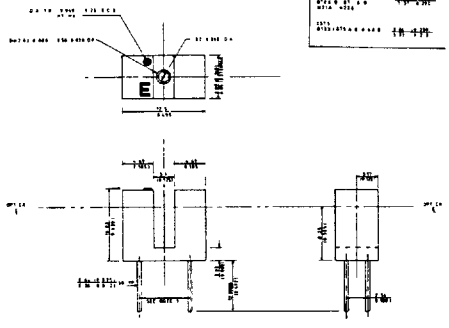

33

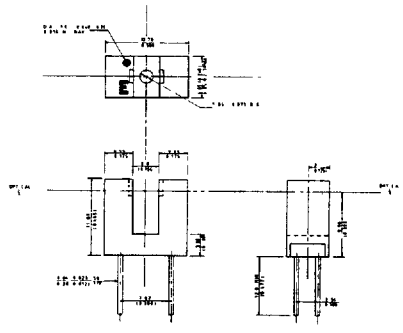

34

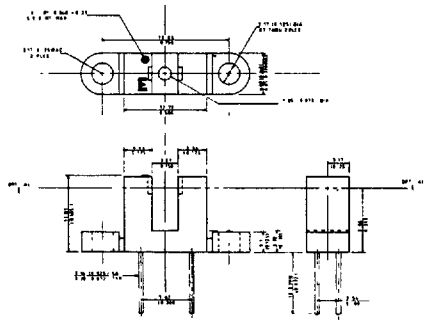

35

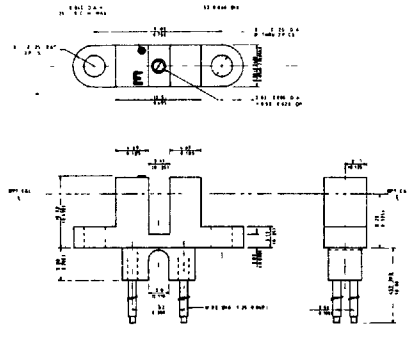

36

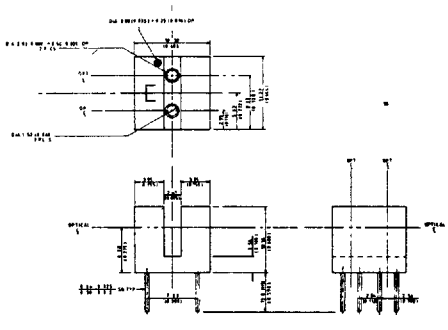

PLEASE NOTE – THESE PACKAGE DIMENSIONS ARE INTENDED ONLY AS A GUIDE, FOR ADDITIONAL INFORMATION PLEASE CONTACT ISOCOM COMPONENTS

T-90-20

37

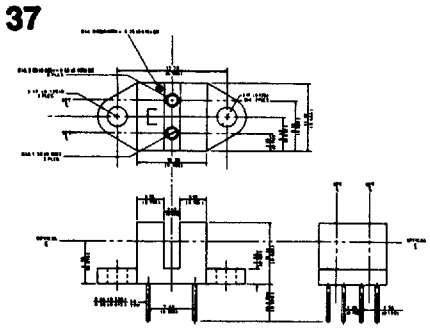

38

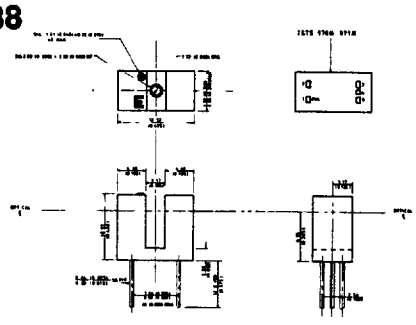

39

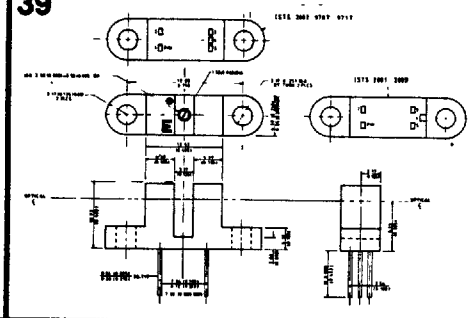

40

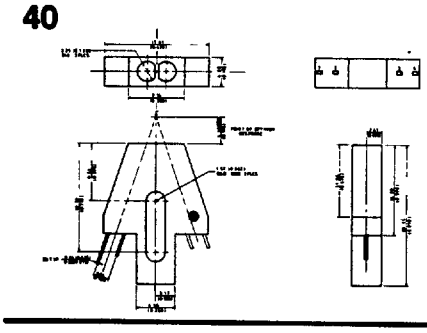

41

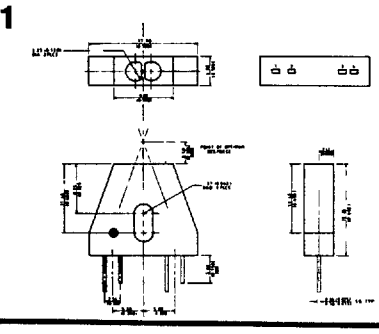

42

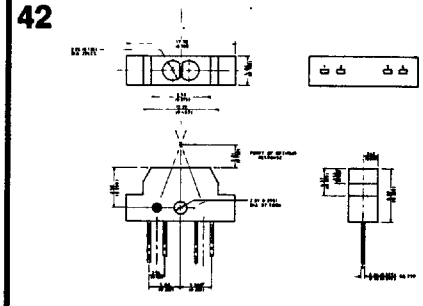

NOTES COVERING SWITCHES

Lead Spacing – the standard interruptor switches are available with two standard lead spacings:

1. 0.320 (8.13) / 0.290 (7.37)
2. 0.230 (5.84) / 0.210 (5.33)

Housing material – Polycarbonate

SCHEMATICS

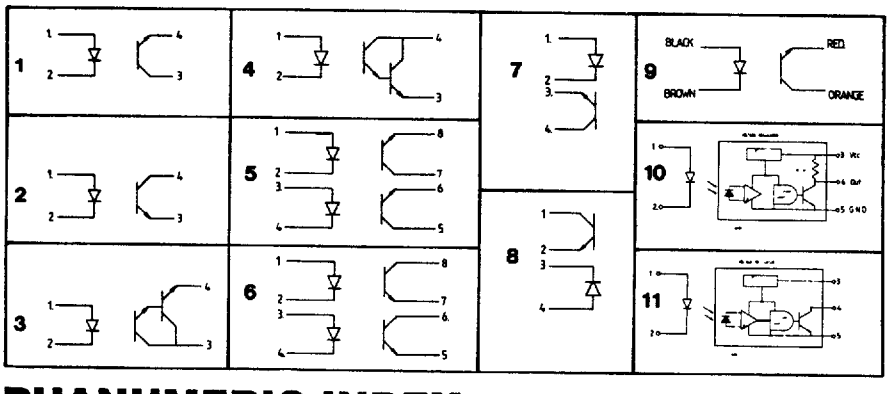

ALPHANUMERIC INDEX

Part	Page	Part	Page	Part	Page	Part	Page	Part	Page
4N25	5	H11D4	5	IS1050G	2	ISD-5	6	ISTS823A	9
4N26	5	H11F1	3	IS1020	2	ISD-74	6	ISTS824A	9
4N27	5	H11F2	3	IS1020G	2	ISD201	6	ISTS832S	9
4N28	5	H11G1	7	IS1100	2	ISD202	6	ISTS832SD	9
4N29	6	H11G2	7	IS1100G	2	ISD203	6	ISTS870A/B	8
4N30	6	H11G3	7	IS201	5	ISPD60	7	ISTS871A/B	8
4N31	6	H11J1	2	IS202	5	ISPD61	7	ISTS875A/B	8
4N32	6	H11J2	2	IS203	5	ISPD62	7	ISTS876A/B	8
4N33	6	H11J3	2	IS204	5	ISPD63	7	ISTS904	8
4N35	5	H11J4	2	IS205	3	ISPD64	7	ISTS970TN	10
4N36	5	H11J5	2	IS206	3	ISPD65	7	ISTS971TN	10
4N37	5	H11L1	3	IS2040	6	ISQ1	6	MCA2-55	6
4N38	5	H11L2	3	IS2040G	6	ISQ201	6	MCS2400	4
4N38A	5	H21A1	8	IS2060	6	ISQ202	6	MCT 2	4
4N39	4	H21A2	8	IS2060G	6	ISQ203	6	MCT 2E	4
4N40	4	H21B1	10	IS2100	6	ISQ5	6	MCT 6	6
4N45	4	H21B2	10	IS2100G	6	ISQ74	6	MOC3009	2
4N46	4	H21B3	10	IS3020	2	ISTS100	8	MOC3010	2
6N135	3	H22A1	8	IS3021	2	ISTS101	8	MOC3011	2
6N136	3	H22A2	8	IS604	4	ISTS149	10	MOC3030	2
6N137	3	H22B1	10	IS605	4	ISTS150	9	MOC3031	2
6N138	4	H22B2	10	IS606	4	ISTS151	9	MOC3032	2
6N139	4	H22B3	10	IS607	2	ISTS200	8	MOC3040	2
CNY17-1	5	H24A1	2	IS608	2	ISTS2001	10	MOC3041	2
CNY17-2	5	H24A2	2	IS609	3	ISTS2002	10	MOC3042	2
CNY17-3	5	H24B1	6	IS610	3	ISTS2003	10	MOC8050	7
CNY17-4	5	H24B2	6	IS611	3	ISTS201	8	SFH600-0	5
CNY17-5	5	ICPL2502	3	IS620	2	ISTS250	9	SFH600-1	5
CNY30	4	ICPL2503	3	IS621	2	ISTS251	9	SFH600-2	5
CNY34	4	ICPL2530	3	IS622	2	ISTS300	9	SFH600-3	5
CNY35	4	ICPL2531	3	IS623	2	ISTS301	9	SFH600-4	5
H11AA1	4	ICPL2533	3	IS654A	7	ISTS400	9	SFH601-1	5
H11AV1	2	ICPL2601	3	IS655A	7	ISTS401	9	SFH601-2	5
H11AV2	2	ICPL2630	3	IS656A	7	ISTS703A	10	SFH601-3	5
H11AV3	2	ICPL2631	3	IS657A	7	ISTS708	10	SFH601-4	5
H11B1	6	ICPL2730	4	IS657B	7	ISTS804	8	SFH601-5	5
H11C4	4	ICPL2731	4	IS658A	7	ISTS805	8	SFH609-1	5
H11C5	4	ICPL3700	3	IS659	7	ISTS813S3	9	SFH609-2	5
H11C6	4	IS-1	4	IS660	7	ISTS813S5	9	SFH609-3	5
H11D1	5	IS-5	4	IS661	7	ISTS813S7	9	TIL 111	4
H11D2	5	IS-74	4	IS662	7	ISTS822S	9	TIL119	7
H11D3	5	IS1050	2	ISD-1	6	ISTS822SD	9		

All information contained within this catalogue is believed to be accurate and reliable. However, Isocom Components Ltd. and its affiliates can accept no liability for any errors or ommissions, and reserve the right to change specifications without notice.