File No.	392	SHEET	1 /1

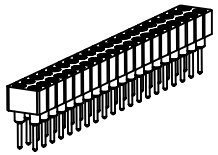

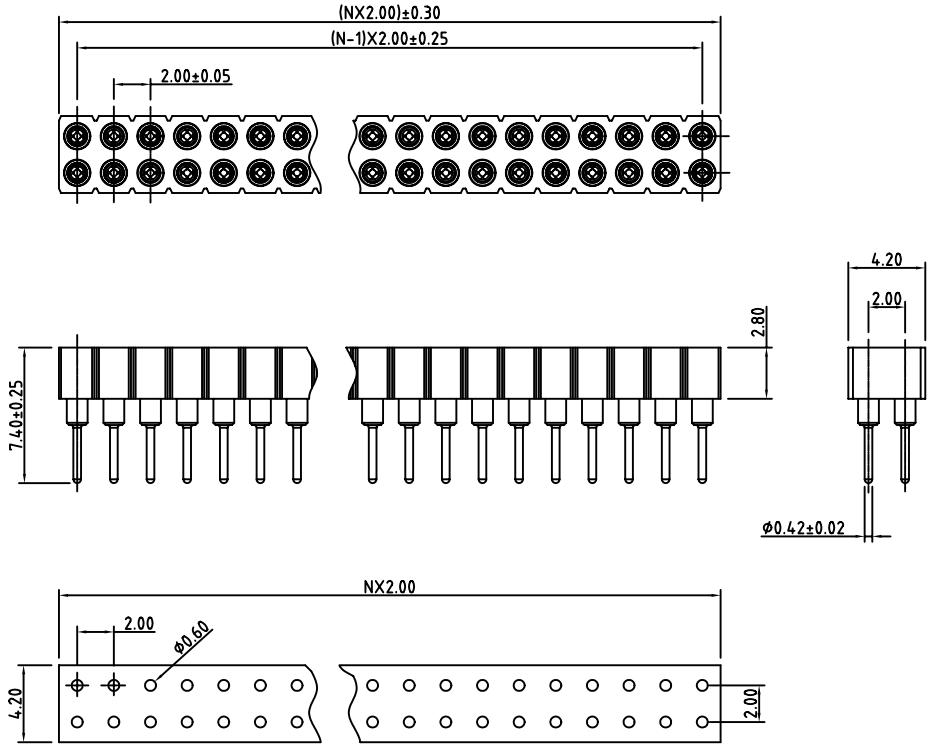

P.C.B. LAYOUT

N=Number of contacts

Material

Insulator:Glass filled thermoplastic plyester,self extinguishing UL 94 V-0,colour black,resistant to mineral acids, solvents, greases, oils (short time).

Receptacle contact:

Sleeve:Screw-machined brass,gold or tin-lead plated over 2-3um nickel

Clip:Stamped beryllium-copper,gold or tin-lead plated over 2-3um nickel.

Pin contact: Screw-machined brass or phosphor bronze. gold or tin-lead plated over 2-3um nickel

Mechanical

gauge kiametr(mm):ϕ0.43

Average Insertion foree(N):>=250gf

Average Withdrawal force(N):<=50gf

Mechanical life: min,500cycles.

Electrical

Ratde current(A):1

Ratde voltage: 100VRMS/150VDC

Max contact resistance(mΩ):20mΩ

Insulation resistance:10000MΩmin

Dielectric strength: 1000VRMS min

Air and creepage(min): 0.4/0.5

Capacitance(pF): 1

Environmental

Operating temperature: -55/+125˚C

Vibration(10-2000Hz,15g): no electrical discontinuity>1us

Shock:(50g): no electrical discontinuity>1us

Solderability(IEC 68-2-54 Ta):235˚C,5s max

Resistance to soldering heat:(IEC 68-2-20Tb):260˚C,5s max

Resistance to atmosphenc corrosion: IEC 68-2-42 and 43

Climatic category(IEC): 55/125/21

A MEMBER OF AUK GROUP

太聯事業股份有限公司

AUK CONTRACTORS CO., LTD.

CATEGORY		APPROVED BY	MEI
PART No.	MSS2XXX	CHECKED BY	BECKY
DRAWING No.	MSS2XXX	DRAWING BY	HXY
SCALE	NONE	REV.	A0

UNLESS OTHERWISE SPECIFIED TOLERANCES ARE

.X ±0.30

.XX ±0.10

ANG. ±1°

UNIT mm

NO.	REV.	REVISIONS	CHK	DATE
0	A0	NEW RELEASE		2004.03.09