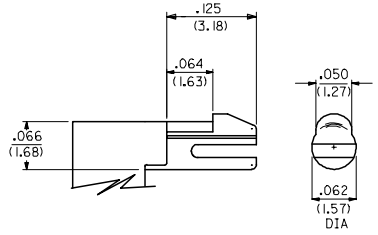

PEG DETAIL

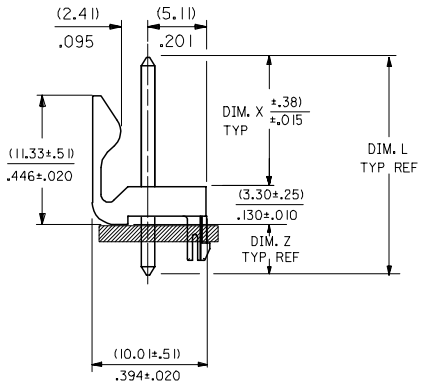

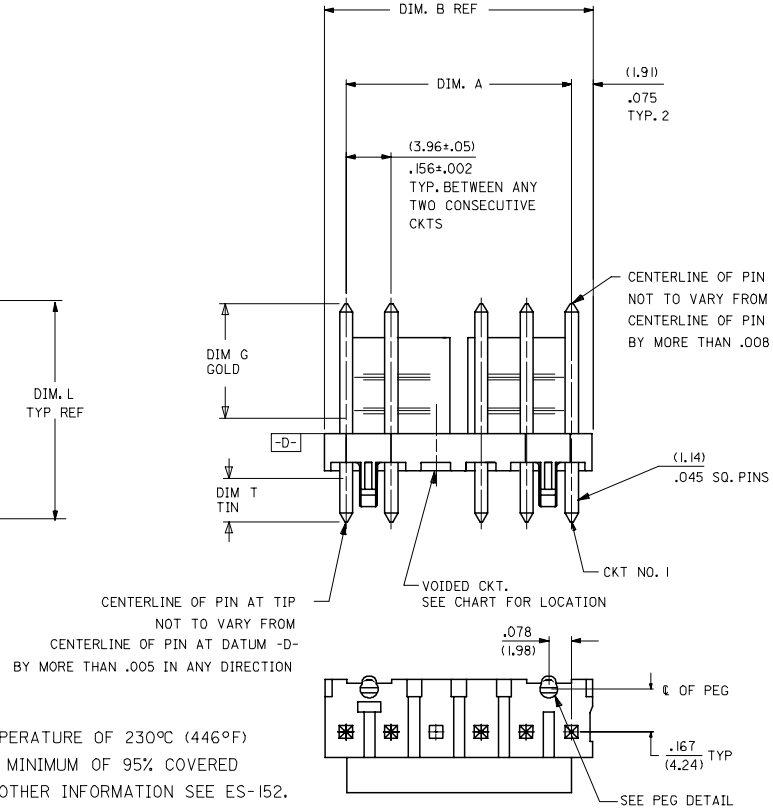

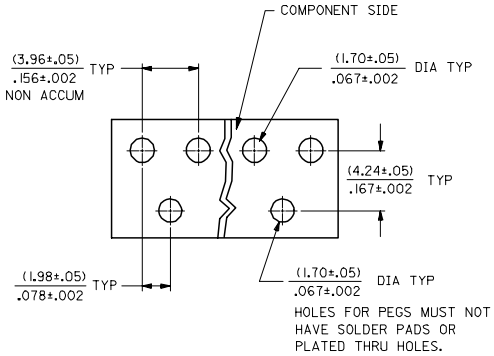

RECOMMENDED PC BOARD HOLE LAYOUT

FOR .062 THK PCB

NO. OF CKT'S.	DIM. A	DIM. B	NO. OF PEGS
2	(3.96±.05) / .156±.002	(7.77) / .306	1
3	(7.92±.08) / .312±.003	(11.73) / .462	2
4	(11.89±.08) / .468±.003	(15.70) / .618	2
5	(15.85±.10) / .624±.004	(19.66) / .774	2
6	(19.81±.10) / .780±.004	(23.62) / .930	2
7	(23.77±.10) / .936±.004	(27.58) / 1.086	2
8	(27.74±.13) / 1.092±.005	(31.55) / 1.242	2
9	(31.70±.13) / 1.248±.005	(35.51) / 1.398	2
10	(35.66±.13) / 1.404±.005	(39.47) / 1.554	2
11	(39.62±.15) / 1.560±.006	(43.43) / 1.710	2
12	(43.59±.15) / 1.716±.006	(47.40) / 1.866	2
13	(47.55±.15) / 1.872±.006	(51.36) / 2.022	2
14	(51.51±.18) / 2.028±.007	(55.32) / 2.178	2
15	(55.47±.18) / 2.184±.007	(59.28) / 2.334	2
16	(59.44±.18) / 2.340±.007	(63.25) / 2.490	2
17	(63.40±.20) / 2.496±.008	(67.21) / 2.646	2
18	(67.36±.20) / 2.652±.008	(71.17) / 2.802	2

NOTES:

2. SOLDERABILITY: WHEN PARTS ARE SOLDERED AT A TEMPERATURE OF 230°C (446°F) FOR 5 SECONDS, EACH SOLDERED SURFACE SHALL BE A MINIMUM OF 95% COVERED WITH A SMOOTH CONTINUOUS ADHERENT COATING. FOR OTHER INFORMATION SEE ES-152.
3. PIN PUSH OUT FORCE: PRIOR TO SOLDERING, A 3 POUND MINIMUM FORCE (IN EITHER DIRECTION) SHALL BE REQUIRED TO PUSH THE PIN OUT OF THE HEADER.
4. FOR ADDITIONAL INFORMATION AND TESTING PROCEDURES SEE PS-08-50.
5. PARTS ARE STACKABLE END TO END ON (3.96)/.156 CENTERS.
6. FOR PART WITHOUT PEG SEE DWG. NO. SDA-41791

MATERIAL: HEADER: GLASS FILLED POLYESTER, 94V-0, MOLDED NATURAL (WHITE).

FINISH: PER ES-88

(102) OVERALL TIN: 5.08 MICROMETERS MIN OVER 2.54 MIN COPPER.

(154) OVERALL TIN: 2.54 MICROMETERS MIN OVER 1.27 MIN NICKEL.

(208) SELECT GOLD: 0.38 MICROMETERS MIN,
*SELECT TIN: 2.54 MICROMETERS MIN,
OVERALL NICKEL UNDERPLATE: 1.27 MICROMETERS MIN.

(228) SELECT GOLD: 0.76 MICROMETERS MIN,
*SELECT TIN: 2.54 MICROMETERS MIN,
OVERALL NICKEL UNDERPLATE: 1.27 MICROMETERS MIN.

*THE PRIMARY SHIPPING CARTON WILL BE LABELED "COMPLIANT TO RoHS DIRECTIVE 2002/95/EC AND ELV ANNEX II OF DIRECTIVE 2000/53/EC". CARTONS WITHOUT THIS LABEL MAY CONTAIN PRODUCT WITH TIN-LEAD PLATING.

ME10 & ADD PARTS
EC NO: UCP2005-1109 2004/12/23
DRWN: ADRATNOL 2004/12/23
CHKD: SAMIEC 2004/12/23
APPR: WMARGULIS 2004/12/23
DESCRIPTION
REV D1

QUALITY SYMBOLS
▼=0
Ⓒ=0

GENERAL TOLERANCES (UNLESS SPECIFIED)	mm	INCH
4 PLACES	± ---	± ---
3 PLACES	± ---	± ---
2 PLACES	± ---	± ---
1 PLACE	± ---	± ---
ANGULAR ±1/2°		

DRAFT WHERE APPLICABLE MUST REMAIN WITHIN DIMENSIONS

DIMENSION STYLE: MM/IN
SCALE: ---
DESIGN UNITS: METRIC
THIRD ANGLE PROJECTION

DRAWN BY: SAMIEC DATE: 01/16/91
CHECKED BY: PATEL DATE: 01/16/91
APPROVED BY: LENZ DATE: 01/16/91

TITLE: FRICTION LOCK HEAD ASSY .156 CENTERS STR SQ PINS W/PEGS

molex MOLEX INCORPORATED

MATERIAL NO.: SEE CHART
DOCUMENT NO.: SDA-42891
SHEET NO.: 1 OF 4
SIZE: C

THIS DRAWING CONTAINS INFORMATION THAT IS PROPRIETARY TO MOLEX INCORPORATED AND SHOULD NOT BE USED WITHOUT WRITTEN PERMISSION

42891

ENG. NO.	HEADER NO.	PIN NO.	PLT	DIM. L	DIM. X	DIM. G GOLD	DIM. Z	DIM. T TIN	NO OF CKTS	VOID CKTS	PACKAGING	EDPS NO ON COL	
A-42891-0002/0018	41790-0053/0069	2161-94(102)	102	.720 (18.29)	.450 (11.43)	N/A	.140 (3.56)	OVERALL	2-18	NONE	BULK PER PK-42491-001	1	
A-42891-0120/0136	41790-0053/0069	43294-0209	208	.720 (18.29)	.450 (11.43)	.270 (6.86)	.140 (3.56)	.160 (4.06)	2-18	NONE	BULK PER PK-42491-001	2	
A-42891-0137/0153	41790-0053/0069	43294-0210	228	.720 (18.29)	.450 (11.43)	.270 (6.86)	.140 (3.56)	.160 (4.06)	2-18	NONE	BULK PER PK-42491-001	3	

A-42891-0002/0018			A-42891-0120/0136			A-42891-0137/0153											
EDP NO.	ENG. NO.	NO OF CKTS	EDP NO.	ENG. NO.	NO OF CKTS	EDP NO.	ENG. NO.	NO OF CKTS	EDP NO.	ENG. NO.	NO OF CKTS	EDP NO.	ENG. NO.	NO OF CKTS	EDP NO.	ENG. NO.	NO OF CKTS
26-60-6020	A-42891-0002	2	42891-0120	A-42891-0120	2	42891-0137	A-42891-0137	2			2			2			2
26-60-6030	A-42891-0003	3	42891-0121	A-42891-0121	3	42891-0138	A-42891-0138	3			3			3			3
26-60-6040	A-42891-0004	4	42891-0122	A-42891-0122	4	42891-0139	A-42891-0139	4			4			4			4
26-60-6050	A-42891-0005	5	42891-0123	A-42891-0123	5	42891-0140	A-42891-0140	5			5			5			5
26-60-6060	A-42891-0006	6	42891-0124	A-42891-0124	6	42891-0141	A-42891-0141	6			6			6			6
26-60-6070	A-42891-0007	7	42891-0125	A-42891-0125	7	42891-0142	A-42891-0142	7			7			7			7
26-60-6080	A-42891-0008	8	42891-0126	A-42891-0126	8	42891-0143	A-42891-0143	8			8			8			8
26-60-6090	A-42891-0009	9	42891-0127	A-42891-0127	9	42891-0144	A-42891-0144	9			9			9			9
26-60-6100	A-42891-0010	10	42891-0128	A-42891-0128	10	42891-0145	A-42891-0145	10			10			10			10
26-60-6110	A-42891-0011	11	42891-0129	A-42891-0129	11	42891-0146	A-42891-0146	11			11			11			11
26-60-6120	A-42891-0012	12	42891-0130	A-42891-0130	12	42891-0147	A-42891-0147	12			12			12			12
26-60-6130	A-42891-0013	13	42891-0131	A-42891-0131	13	42891-0148	A-42891-0148	13			13			13			13
26-60-6140	A-42891-0014	14	42891-0132	A-42891-0132	14	42891-0149	A-42891-0149	14			14			14			14
26-60-6150	A-42891-0015	15	42891-0133	A-42891-0133	15	42891-0150	A-42891-0150	15			15			15			15
26-60-6160	A-42891-0016	16	42891-0134	A-42891-0134	16	42891-0151	A-42891-0151	16			16			16			16
26-60-6170	A-42891-0017	17	42891-0135	A-42891-0135	17	42891-0152	A-42891-0152	17			17			17			17
26-60-6180	A-42891-0018	18	42891-0136	A-42891-0136	18	42891-0153	A-42891-0153	18			18			18			18

STANDARD PRODUCTS

	SEE SHEET 1	A9	SEE SHEET 1
	SEE SHEET 1	A6	SEE SHEET 1
	SEE SHEET 1	A5	SEE SHEET 1
	SEE SHEET 1	A4	SEE SHEET 1
D	SEE SHEET 1	A1	SEE SHEET 1
C	SEE SHEET 1	A	SEE SHEET 1
B	SEE SHEET 1	1	SEE SHEET 1
LTR.	REVISIONS	LTR.	REVISIONS

DIMENSIONS SHOWN (METRIC) INCH

UNLESS OTHERWISE SPECIFIED TOLERANCES: ANGULAR ± 1/2°

	INCH	METRIC
3 PLACE	±	
2 PLACE	±	±
1 PLACE		±

DRAFT WHERE APPLICABLE MUST REMAIN WITHIN DIMENSIONS

DRWG. BY SAMIEC | CHK'D. BY PATEL
APP'D. BY LENZ | SCALE :

▽ = 0 ▼ = 0 REVISE ONLY ON CAD SYSTEM

TITLE FRICTION LOCK HEADER ASSY .156℄ STR SQ PINS W/PEGS 42891 SERIES DWG

molex MOLEX INCORPORATED LISLE, ILL. 60532 U.S.A.

SHEET NO. 2 | DATE 08/22/88

PART NO. SEE CHART | DRWG. NO. SDA-42891

FILE NAME S42891X2

THIS DRAWING CONTAINS INFORMATION THAT IS PROPRIETARY TO MOLEX INC. AND SHOULD NOT BE USED WITHOUT WRITTEN PERMISSION.

DIV. C | SIZE C

ENG. NO.	HEADER NO.	PIN NO.	DIM. L	DIM. X	DIM. G GOLD	DIM. Z	DIM. T TIN	NO OF CKTS	VOID CKTS	PACKAGING
A-42891-0068/0084	41790-0053/0069	2161-45(102)	.821 (20.85)	.450 (11.43)		.241 (6.12)		2-18	NONE	BULK PER PK-42491-002
A-42891-0085/0096	41790-0058/0069	2161-94(102)	.720 (18.29)	.450 (11.43)		.140 (3.56)		7-18	7	BULK PER PK-42491-001
A-42891-0097/0112	41790-0054/0069	2161-94(102)	.720 (18.29)	.450 (11.43)		.140 (3.56)		3-18	3	BULK PER PK-42491-001
A-42891-0019/0035	41790-0053/0069	2161-94(501)	.720 (18.29)	.450 (11.43)		.140 (3.56)		2-18	NONE	BULK PER PK-42491-001
A-42891-0036/0052	41790-0053/0069	2161-94(102)	.720 (18.29)	.450 (11.43)		.140 (3.56)		2-18	2	BULK PER PK-42491-001
A-42891-0053/0067	41790-0053/0069	2161-94(102)	.720 (18.29)	.450 (11.43)		.140 (3.56)		4-18	4	BULK PER PK-42491-001

A-42891-0068/0084			A-42891-0085/0096			A-42891-0097/0112			A-42891-0019/0035			A-42891-0036/0052			A-42891-0053/0067		
EDP NO.	ENG. NO.	NO OF CKTS	EDP NO.	ENG. NO.	NO OF CKTS	EDP NO.	ENG. NO.	NO OF CKTS	EDP NO.	ENG. NO.	NO OF CKTS	EDP NO.	ENG. NO.	NO OF CKTS	EDP NO.	ENG. NO.	NO OF CKTS
26-60-6021	A-42891-0068	2			2			2	26-60-6022	A-42891-0019	2			2			2
	A-42891-0069	3			3	42891-0097	A-42891-0097	3	26-60-6032	A-42891-0020	3	26-62-6030	A-42891-0037	3			3
	A-42891-0070	4			4	42891-0098	A-42891-0098	4	26-60-6042	A-42891-0021	4	26-62-6040	A-42891-0038	4		A-42891-0053	4
	A-42891-0071	5			5	42891-0099	A-42891-0099	5	26-60-6052	A-42891-0022	5	26-62-6050	A-42891-0039	5	26-62-6051	A-42891-0054	5
26-60-6061	A-42891-0072	6			6	42891-0100	A-42891-0100	6	26-60-6062	A-42891-0023	6	26-62-6060	A-42891-0040	6		A-42891-0055	6
	A-42891-0073	7	42891-0085	A-42891-0085	7	42891-0101	A-42891-0101	7	26-60-6072	A-42891-0024	7	26-62-6070	A-42891-0041	7		A-42891-0056	7
26-60-6081	A-42891-0074	8	42891-0086	A-42891-0086	8	42891-0102	A-42891-0102	8	26-60-6082	A-42891-0025	8	26-62-6080	A-42891-0042	8		A-42891-0057	8
	A-42891-0075	9	42891-0087	A-42891-0087	9	42891-0103	A-42891-0103	9	26-60-6092	A-42891-0026	9	26-62-6090	A-42891-0043	9		A-42891-0058	9
26-60-6101	A-42891-0076	10	26-62-6082	A-42891-0088	10	42891-0104	A-42891-0104	10	26-60-6102	A-42891-0027	10	26-62-6100	A-42891-0044	10	26-62-6101	A-42891-0059	10
	A-42891-0077	11	42891-0089	A-42891-0089	11	42891-0105	A-42891-0105	11	26-60-6112	A-42891-0028	11	26-62-6110	A-42891-0045	11		A-42891-0060	11
	A-42891-0078	12	42891-0090	A-42891-0090	12	42891-0106	A-42891-0106	12	26-60-6122	A-42891-0029	12	26-62-6120	A-42891-0046	12		A-42891-0061	12
	A-42891-0079	13	42891-0091	A-42891-0091	13	42891-0107	A-42891-0107	13	26-60-6132	A-42891-0030	13	26-62-6130	A-42891-0047	13		A-42891-0062	13
	A-42891-0080	14	42891-0092	A-42891-0092	14	42891-0108	A-42891-0108	14	26-60-6142	A-42891-0031	14	26-62-6140	A-42891-0048	14		A-42891-0063	14
	A-42891-0081	15	42891-0093	A-42891-0093	15	42891-0109	A-42891-0109	15	26-60-6152	A-42891-0032	15	26-62-6150	A-42891-0049	15		A-42891-0064	15
	A-42891-0082	16	42891-0094	A-42891-0094	16	42891-0110	A-42891-0110	16	26-60-6162	A-42891-0033	16	26-62-6160	A-42891-0050	16		A-42891-0065	16
	A-42891-0083	17	42891-0095	A-42891-0095	17	42891-0111	A-42891-0111	17	26-60-6172	A-42891-0034	17	26-62-6170	A-42891-0051	17		A-42891-0066	17
	A-42891-0084	18	42891-0096	A-42891-0096	18	42891-0112	A-42891-0112	18	26-60-6182	A-42891-0035	18	26-62-6180	A-42891-0052	18		A-42891-0067	18

LTR.	REVISIONS	LTR.	REVISIONS
	SEE SHEET 1		SEE SHEET 1
	SEE SHEET 1		SEE SHEET 1
	SEE SHEET 1	C	SEE SHEET 1
	SEE SHEET 1	B	SEE SHEET 1
	SEE SHEET 1	A8	SEE SHEET 1
	SEE SHEET 1	A3	SEE SHEET 1
	SEE SHEET 1	A2	SEE SHEET 1

DIMENSIONS SHOWN (METRIC) INCH

UNLESS OTHERWISE SPECIFIED TOLERANCES: ANGULAR ± 1/2°

	INCH	METRIC
3 PLACE	±	
2 PLACE	±	±
1 PLACE		±

DRAFT WHERE APPLICABLE MUST REMAIN WITHIN DIMENSIONS

DRWG. BY JJS | CHK'D. BY PATEL | APP'D. BY LENZ | SCALE :

▽ = 0 ▼ = 0 REVISE ONLY ON CAD SYSTEM

TITLE FRICTION LOCK HEADER ASSY .156¢ STR SQ PINS W/PEGS 42891 SERIES DWG

MOLEX INCORPORATED LISLE, ILL. 60532 U.S.A.

SHEET NO. 3 | DATE 3/17/92

PART NO. SEE CHART | DRWG. NO. SDA-42891

FILE NAME S42891X3

THIS DRAWING CONTAINS INFORMATION THAT IS PROPRIETARY TO MOLEX INC. AND SHOULD NOT BE USED WITHOUT WRITTEN PERMISSION.

DIV. C | SIZE C