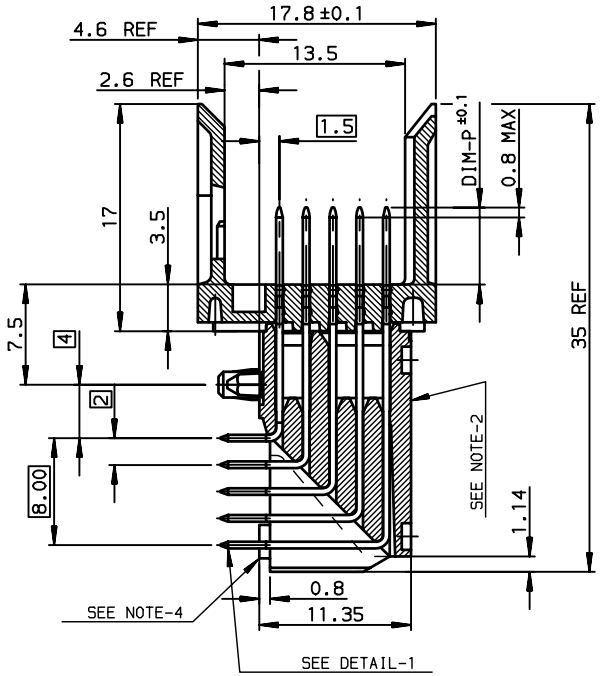


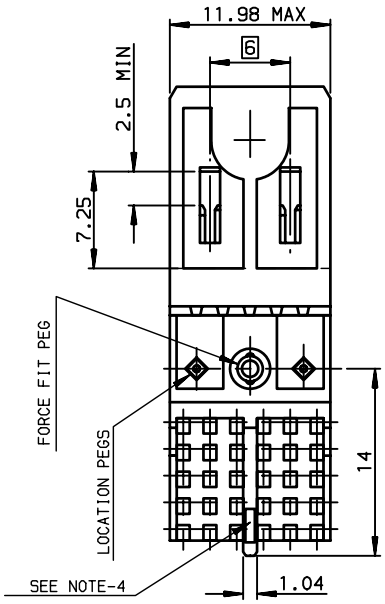


## TIN LEAD PART NUMBER

**Part Number: HM1L51xyP000Hz**

MATING LENGTH DIM-P / REPLACE 'x' BY:

| | ROW-A | ROW-B | ROW-C | ROW-D | ROW-E |
|---|---|---|---|---|---|
| A = | 5.00 | 5.00 | 5.00 | 5.00 | 5.00 |
| L = | 5.75 | 5.75 | 5.75 | 5.75 | 5.75 |
| D = | 6.50 | 6.50 | 6.50 | 6.50 | 6.50 |
| B = | 6.50 | 5.00 | 5.00 | 5.00 | 5.00 |
| C = | 6.50 | 5.75 | 5.75 | 6.50 | 5.75 |

STD

PERFORM LEVEL REPLACE 'z' BY:

000H6 = PL1 OF IEC SPEC

000H4 = PL3 OF IEC SPEC

040H0 = BELLCORE 4 GAZES SPEC

TERMINATION LENGTH DIM-D: D=2.90 ±0.3, replace y by A; D=3.70 ±0.3, replace y by B

## LEAD FREE PART NUMBER

**Part Number: HM1L51xyP000HzLF**

MATING LENGTH DIM-P / REPLACE 'x' BY:

| | ROW-A | ROW-B | ROW-C | ROW-D | ROW-E |
|---|---|---|---|---|---|
| A = | 5.00 | 5.00 | 5.00 | 5.00 | 5.00 |
| L = | 5.75 | 5.75 | 5.75 | 5.75 | 5.75 |
| D = | 6.50 | 6.50 | 6.50 | 6.50 | 6.50 |
| B = | 6.50 | 5.00 | 5.00 | 5.00 | 5.00 |
| C = | 6.50 | 5.75 | 5.75 | 6.50 | 5.75 |

STD

PERFORM LEVEL REPLACE 'z' BY:

000H6 = PL1 OF IEC SPEC

000H4 = PL3 OF IEC SPEC

040H0 = BELLCORE 4 GAZES SPEC

TERMINATION LENGTH DIM-D: D=2.90 ±0.3, replace y by A; D=3.70 ±0.3, replace y by B

DETAIL OF FORCE-FIT PEGS

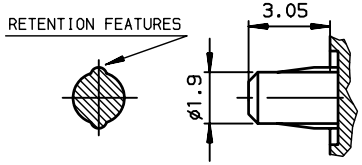


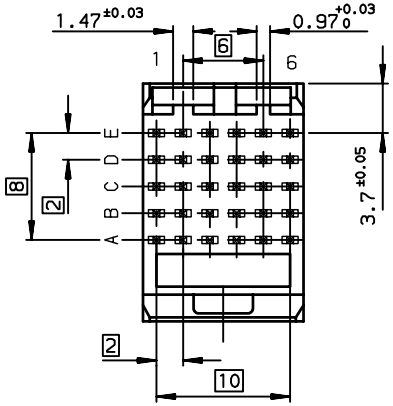


GENERAL CHARACTERISTICS AND ROHS INFORMATIONS:

SEE DRAWING C-8626-000S

NOTE-2: INSERTION IN PCB, HANDLING OR BENCH PRESS
NOTE-3:
NOTE-4: REAR CENTRAL SUPPORT FOR BETTER ASSY ON PCB

LAYOUT FOR P.C.B
(PER 12mm LENGTH)

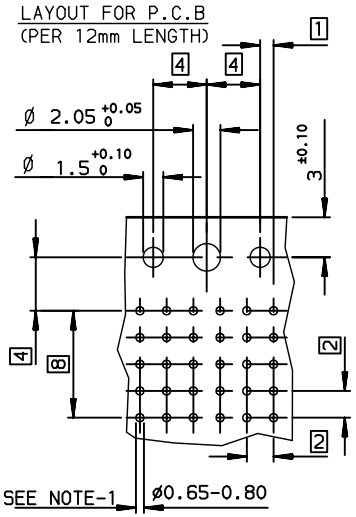


DETAIL-1: SOLDER PIN

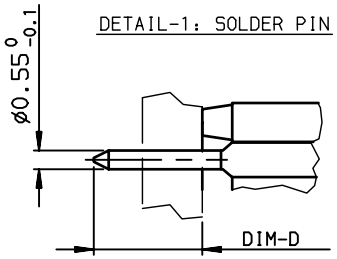


| rev | ecn no | dr | date |
|---|---|---|---|
| B | - | MAS | 2000/08/31 |
| C | LS05-001 | MLE | 2005/03/15 |
| D | LS06-0095 | LGO | 2006/07/10 |
| - | - | - | - |
| - | - | - | - |
| - | - | - | - |
| - | - | - | - |

REDUCED SCALE SHEET

European Views

www.fciconnect.com

surface ISO 1302 ✓ | tolerance std ISO 406 ISO 1101 | projection | mm

TOLERANCES UNLESS OTHERWISE SPECIFIED

| | | |
|---|---|---|
| Dr | CHAMPION | 1997/06/17 |
| Eng | LENOIR | 1997/06/17 |
| Chr | LEGARE | 1997/06/17 |
| Appr | LEGARE | 1997/06/17 |

| ANGULAR | | LINEAR | |
|---|---|---|---|
| 0.XX° | ±2° | 0.X | ±0.1 |
| | | 0.XX | ±0.1 |
| | | 0.XXX | ±0.1 |

size A3 | Scale 2.5

ECN LS06-0095

Product family METRAL | Spec ref -

title: METRAL RA HEADER 5 ROW
STANDARD SOLDER 30 WAY

dwg no C-8626-0239 | Rev. D

catalog no -

CUSTOMER | sheet 1 of 1

Copyright FCI.

REV F - 2006-04-17