.100"c.l. Bottom Mount Socket Strip

FastBall Delivery 3/5 Days to You!

High Temp

.100"

☐ BMSS-1 ☐☐ - ☐ - ☐☐ - ☐ - ☐☐ - ☐☐☐

H High Temp.	H
Pins per row	01-50
Singles	S
Doubles	D
Pin Options (Metric Dimensions)	02
Low Insertion (Not available in Tin Plating)	L
Plating Options	
G = 10μ in gold in contact area, gold flash on tail	G
GT = 10μ in gold in contact area, 200μ in tin/lead on tail	GT
H = 30μ gold on contact area, 200μ in tin/lead on tail	H
T = 200μ in tin/lead over entire pin	T
Position for Polarization Option	001-100

Other plating options available upon request

Mates with: TSHS, TSHR, TSHC, BSTS, BSTC, TSCHRE, LTSHR, LTSHRE, BSTCM, LTSHCRE, TSHRE, TSHSM, TSHCR

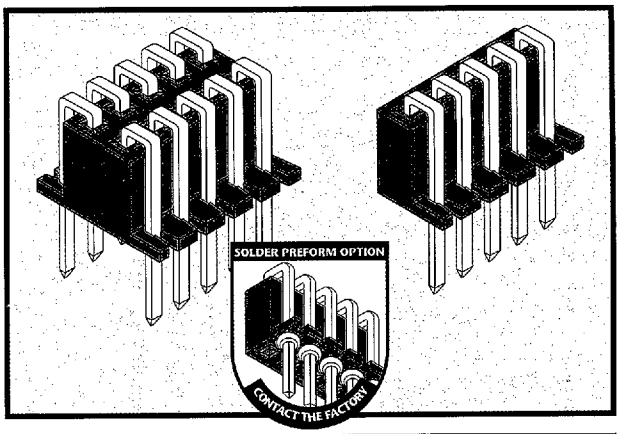

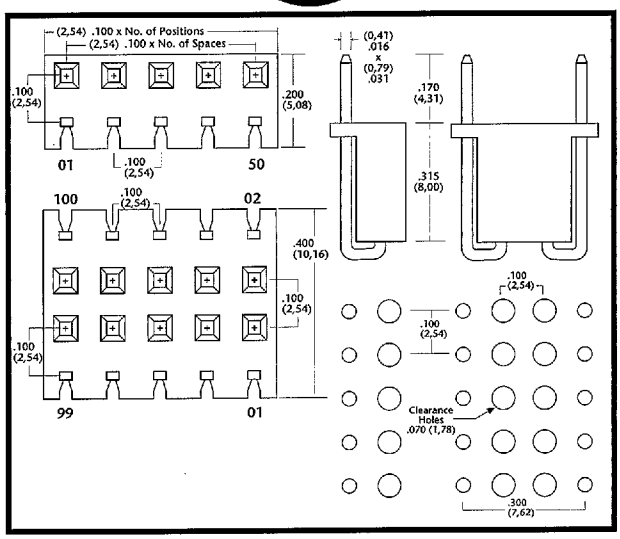

APPLICATION

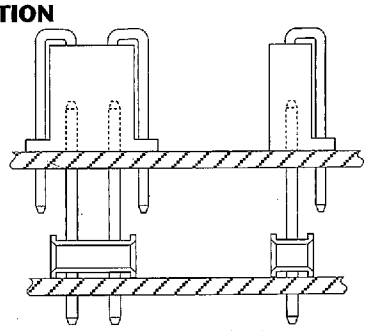

Bottom Mount Applications

Product cut to specific sizes is noncancellable/nonreturnable.
Parts are subject to change without notice.

Materials & Performance Specifications

	STANDARD	HIGH TEMPERATURE
Insulator	Black, glass filled, polyester	High temperature thermoplastic
Terminal	Phosphor Bronze	Phosphor Bronze
Insulation Resistance	5,000M Ω minimum	5,000M Ω minimum
Flammability	UL 94V-O	UL 94V-O
Temperature Range	-65˚C to +125˚C	-65˚C to +250˚C
Current Rating	1 ampere	1 ampere
Plating	All Plating Options over 50μ in Ni	All Plating Options over 50μ in Ni

Delivery On Time Every Time...Or The Order's Free!

D 24F 9019296 0000026 07T

ne: 812-944-7244 • Facsimile: 812-944-7268 • Email: mle@iglou.com