Tous droits strictement reservés. Reproduction ou communication a des tiers interdite sous quelque forme que ce soit sans autorisation ecrite du propriétaire. Propriété de © FCI ELECTRONICS. Droits de reproduction FCI ELECTRONICS INC.

All rights strictly reserved. Reproduction or issue to third parties in any form whatever is not permitted without written authority from the proprietor. Property of © FCI ELECTRONICS Copyright FCI ELECTRONICS INC.

PART NUMBER
SEE NOTE

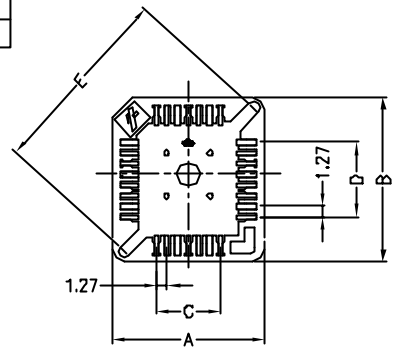

Above for 32 counts only.

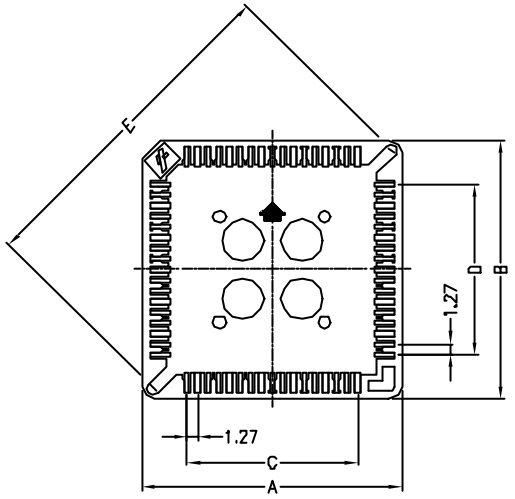

Above for a 20, 28, 44, 52, 68 and 84 counts.

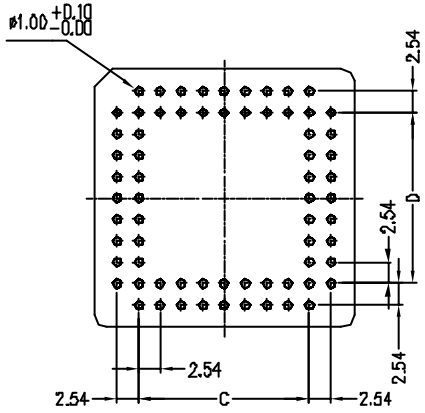

(RECOMMENDED PCB LAYOUT)

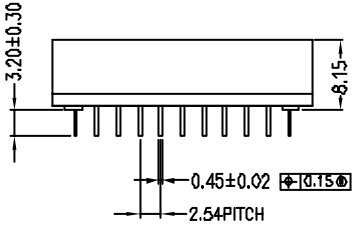

NOTES:

1 MATERIAL:
HOUSING: PPS UL94 V-0, Brown.
CONTACT: Copper Alloy.

2 FINISH:
CONTACT: 100μ" Min. Pure Tin or Tin/Lead plated on soldering end over 50μ" Min. Nickel under-plating.

3 ORDER INFORMATION:

54020-XX 0 3 0 XX

- Series No.
- No. of Contacts: 20 28 32 44 52 68 84
- Contact plated: 0-Tin alloy plated.
- Housing Material/Color: 3-PPS/Brown.
- Post/Pakaging: D-Without Post/In tube package.
- LF: LEAD FREE
  - PT: Pure Tin Plated.
  - BLANK: Tin/Lead Plated

4 SPECIFICATION:
Current Rating: 1A Max.
Voltage Rating: 250V AC Max.
Dielectric Strength: 600V AC RMS for 1 minute.
Contact Resistance: 20 mΩ MAX.
Insulator Resistance: 1000MΩ min. at 500V DC.
Temperature: -40°C to +105°C
Durability: 25 Cycles.

5 MANUFACTURING PROCESS COMPATIBILITY
The housing will withstand exposure to 245°c peak temperature for 5 second in a wave solder application.

A/P PART NO.	Dimension(mm)					MCK PART NO.
	A±0.2	B±0.2	C±0.1	D±0.1	E±0.2	
54020-20030	15.56	15.56	5.08	5.08	18.20	PLCC-20P-T
54020-28030	18.10	18.10	7.62	7.62	21.80	PLCC-28P-T
54020-32030	17.80	20.20	7.62	10.16	23.85	PLCC-32P-T
54020-44030	23.18	23.18	12.70	12.70	29.00	PLCC-44P-T
54020-52030	26.90	26.90	15.24	15.24	33.00	PLCC-52P-T
54020-68030	30.88	30.88	20.32	20.32	40.00	PLCC-68P-T-2
54020-84030	35.98	35.98	25.40	25.40	47.15	PLCC-84P-T-2

mat'l. code					
ltr	ecn no	dr	date		
A	T00386	J.H	3/16/00		
B	T10136	J.H	5/21/01		
C	T03-0440	J.C	10/03/03		
D	T05-0017	W.L	01/24/05	dr	JASON HSU 3/16/00
E	T05-0114	W.L	05/09/05	engr	JASON HSU 3/16/00
F	T5-0212	W.L	09/21/05	chr	J. TSAO 3/16/00
				appd	L. WANG 3/16/00
sheet index	revision	F	F		
	sheet	1	2		

tolerances unless otherwise specified
linear: .X ±0.38; .XX ±0.25; .XXX ±0.20
angles: 0° ±2°

CUSTOMER COPY

projection

mm

scale N/A

FCI Electronics www.fciconnect.com

title: PLCC DIP SOCKET PLCC-XXP-T

product family: PLCC
size: A4
dwg no: 54020
code: TWN
sheet 1 of 2

cage code 24180

form no. 7530-001-103

STATUS Released

PDM: Rev:F

Printed: Apr 14, 2006

Tous droits strictement reserves. Reproduction ou communication a des tiers interdite sous quelque forme que ce soit sans autorisation ecrite du proprietaire. Propriete de ©FCI ELECTRONICS. Droits de reproduction FCI ELECTRONICS INC.

All rights strictly reserved. Reproduction or issue to third parties in any form whatever is not permitted without written authority from the proprietor. Property of ©FCI ELECTRONICS Copyright FCI ELECTRONICS INC.

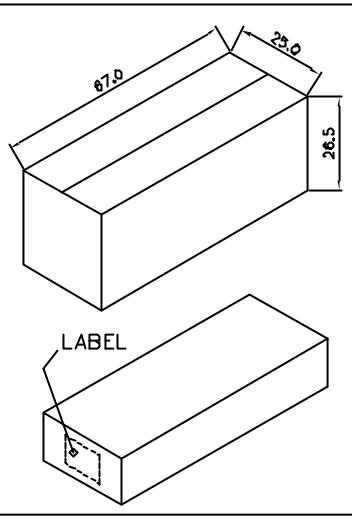

PACKING FOR 68P & 84P

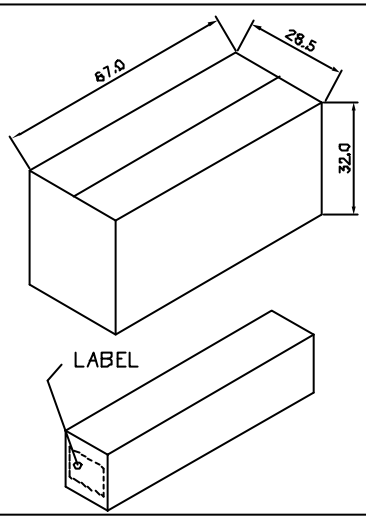

PACKING FOR 20P,28P,32P,44P,52P

DIP PLCC PACKING LIST FOR TUBE=612mm

CONTACTS	PCS/TUBE	TUBE/INNER BOX	PCS/INNER BOX	INNER BOX / OUTER BOX	PCS/OUTER BOX	N.W.(KGS)	G.W.(KGS)
20P	37	49	1813	4	7252	19.0	20.0
28P	32	42	1344	4	5376	19.5	20.5
32P	28	42	1176	4	4704	19.5	20.5
44P	25	35	875	4	3500	20.0	21.0
52P	21	32	672	4	2688	18.5	19.5
68P	18	42	756	2	1512	16.0	17.0
84P	16	39	624	2	1248	17.0	18.0

mat'l. code				tolerances unless otherwise specified			
ltr	ecn no	dr	date	linear	.X ±0.38		
F					.XX ±0.25		
					.XXX ±0.20		
				angles	0° ±2°		
				dr	JASON HSU	3/16/00	
				engr	JASON HSU	3/16/00	
				chr	J. TSAO	3/16/00	
				appd	L. WANG	3/16/00	
sheet index	revision sheet						

CUSTOMER COPY

projection

mm

scale N/A

FCI Electronics www.fciconnect.com

title PLCC DIP SOCKET PLCC-XXP-T

product family PLCC

code TWN

size A4 dwg no 54020

sheet 2 of 2

cage code 24180

form no. 7530-D01-1D3

PDM: Rev:F STATUS Released Printed: Apr 14, 2006