THIS DRAWING IS UNPUBLISHED. RELEASED FOR PUBLICATION 20
© COPYRIGHT 20 BY TYCO ELECTRONICS CORPORATION. ALL RIGHTS RESERVED.

| PART NUMBER | REV | TERMINATOR | FEED TYPE | DESCRIPTION |
|---|---|---|---|---|
| 1528905-1 | A | LEADMAKER | MECH POST FEED | CUTS CARRIER |
| 1528905-2 | A | BENCH | MECH PRE FEED | CUTS CARRIER |
| 1528905-6 | A | LEADMAKER | MECH POST FEED | CONTINUOUS CARRIER |
| 7-1528905-1 | A | LEADMAKER | MECH POST FEED | -1 AND SPARE PARTS |
| 7-1528905-2 | A | BENCH | MECH PRE FEED | -2 AND SPARE PARTS |
| 7-1528905-6 | A | LEADMAKER | MECH POST FEED | -6 AND SPARE PARTS |
| 7-1528905-7 | A | - | - | SPARE PARTS KIT |

SET UP GAGE 458637-3

| LOC | DIST |
|---|---|
| A | 66 |

REVISIONS

| P | LTR | DESCRIPTION | DATE | DWN | APVD |
|---|---|---|---|---|---|
| | A | ECO-08-017578 | 17JUL2008 | MB | MC |

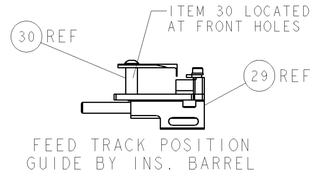


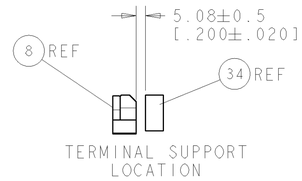


| CRIMP DATA | DELPHI TERMINAL | DELPHI CRIMP SPECS 5 | |
|---|---|---|---|
| TERMINAL NAME: TERMINAL, FEM METRI PACK 630 SPL | | | |
| CRIMP | SIZE | TYPE | RANGE |
| WIRE | 2.16 [.085 IN] | F | 0.50-0.75mm² |
| INSUL | 3.56 [.140 IN] | F | 1.40-1.90 [.055-.075 IN] 7 |
| WIRE STRIP LENGTH 4.60 [.181 IN] | | | APPL INSTRUCTIONS 408-8322 & 408-8490 |
| TERMINAL APPL SPEC | DELPHI CRIMP VALIDATION SHEET 12015864 6 | | FEED 17.50 [.689 IN] |

TERMINALS APPLIED

| TE TERM PN | MANUF TERM PN | - | - |
|---|---|---|---|
| 286738-1 | 12015864 | - | - |
| - | - | - | - |
| - | - | - | - |
| - | - | - | - |

| WIRE SIZE | CRIMP HEIGHT * | REF SETTING * |
|---|---|---|
| 0.75mm² | 1.45 ±0.05 [.057 ±.002 IN] | D5 |
| 0.50mm² | 1.40 ±0.05 [.055 ±.002 IN] | D9 |
| - | - | - |
| - | - | - |
| - | - | - |
| - | - | - |
| - | - | - |
| - | - | - |
| - | - | - |
| - | - | - |
| - | - | - |
| - | - | - |

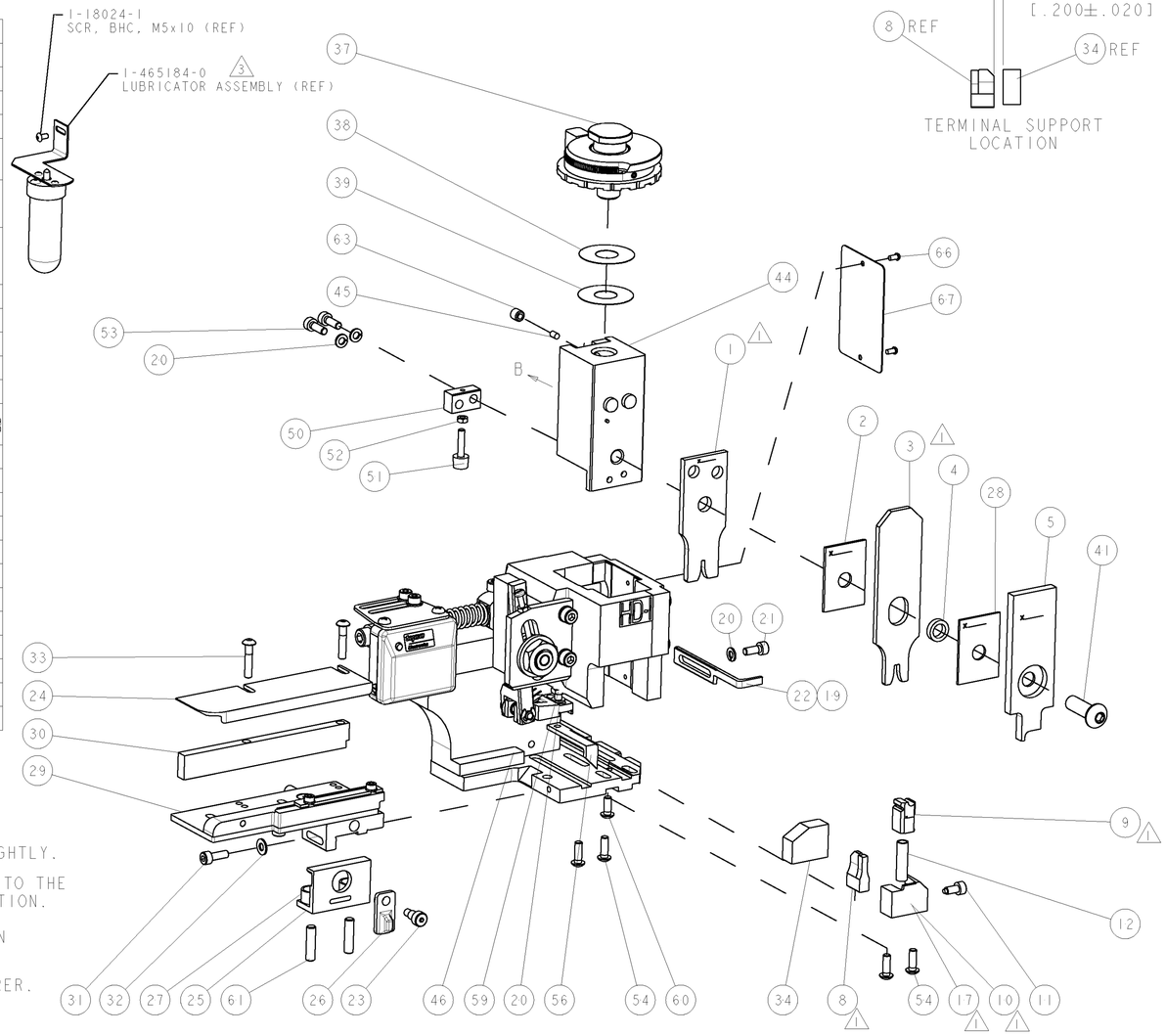


1 RECOMMENDED SPARE PARTS.

2. GREASE RAM, CAM, CAM FOLLOWER AND FEED ROD LIGHTLY.

3 CERTAIN TERMINALS REQUIRE LUBRICATION. REFER TO THE APPLICATOR INSTRUCTION SHEET FOR MORE INFORMATION.

4. LUBRICATE DAILY PER THE APPLICATOR INSTRUCTION SHEET SUPPLIED WITH THE APPLICATOR.

5 ALL CRIMP DATA SUPPLIED BY TERMINAL MANUFACTURER.

6 CRIMPED WIRE BARREL MUST HAVE FRONT AND REAR BELLMOUTH KEPT TO A MINIMUM.

7 THIS APPLICATOR HAS BEEN DESIGNED TO APPLY FLRY TYPE INSULATION. INSULATION RANGE SHOWN IS THAT OF THE APPLICATOR.

* WARNING
ON INSTALLATION, SET WIRE DISC TO LARGEST WIRE SIZE SETTING. USE OF SETTINGS BELOW MIN. REQUIRED CRIMP HEIGHT SETTING WILL CAUSE DAMAGE TO CRIMP TOOLING.

VIEW B ROTATED 180°

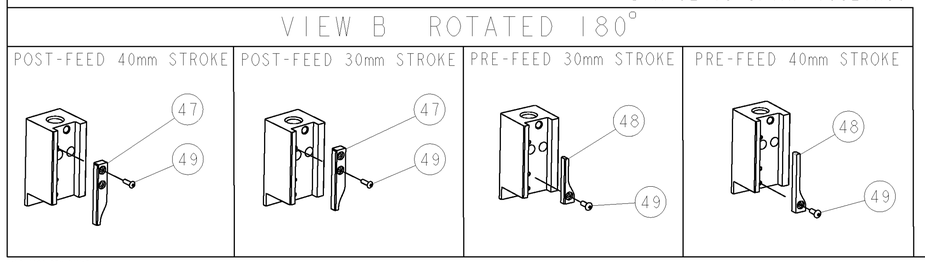


| -77 | -76 | -72 | -71 | -6 | -2 | -1 | PART NO | DESCRIPTION | ITEM NO |
|---|---|---|---|---|---|---|---|---|---|
| - | - | - | - | - | - | - | - | - | 84 |
| - | - | - | - | - | - | - | - | - | 83 |
| - | - | - | - | - | - | - | - | - | 82 |
| - | - | - | - | - | - | - | - | - | 81 |
| - | - | - | - | - | - | - | - | - | 80 |
| - | - | - | - | - | - | - | - | - | 79 |
| - | - | - | - | - | - | - | - | - | 78 |
| - | - | - | - | - | - | - | - | - | 77 |
| - | - | - | - | - | - | - | - | - | 76 |
| - | - | - | - | - | - | - | - | - | 75 |
| - | - | - | - | - | - | - | - | - | 74 |
| -77 | -76 | -72 | -71 | -6 | -2 | -1 | PART NO | DESCRIPTION | ITEM NO |

| -77 | -76 | -72 | -71 | -6 | -2 | -1 | PART NO | DESCRIPTION | ITEM NO |
|---|---|---|---|---|---|---|---|---|---|
| - | - | - | - | - | - | - | - | - | 73 |
| - | - | - | - | - | - | - | - | - | 72 |
| - | 1 | 1 | 1 | 1 | 1 | 1 | 1338705-3 | DOCUMENTATION PACKAGE | 71 |
| - | - | - | - | - | - | - | - | - | 70 |
| - | - | - | - | - | - | - | - | - | 69 |
| - | - | - | - | - | - | - | - | - | 68 |
| - | 1 | 1 | 1 | 1 | 1 | 1 | 461264-5 | PLATE, IDENTIFICATION | 67 |
| - | 2 | 2 | 2 | 2 | 2 | 2 | 21017-2 | SCREW, DRIVE | 66 |
| - | - | - | - | - | - | - | - | - | 65 |
| - | - | - | - | - | - | - | - | - | 64 |
| - | 1 | 1 | 1 | 1 | 1 | 1 | 3-18031-0 | SCR, SET, CUP POINT M6 X 6.0 | 63 |
| - | - | - | - | - | - | - | - | - | 62 |
| - | 2 | 2 | 2 | 2 | 2 | 2 | 2-18032-5 | SCR, SET, FLT POINT M5 X 20.0 | 61 |
| - | 1 | 1 | 1 | 1 | 1 | 1 | 18024-7 | SCR, BTN SKT HD CAP (M4 X 10.0) | 60 |
| - | 1 | 1 | 1 | 1 | 1 | 1 | 5-18022-2 | SCR, HEX HD CAP M4 X 8.0 | 59 |
| - | - | - | - | - | - | - | - | - | 58 |
| - | - | - | - | - | - | - | - | - | 57 |
| - | 1 | 1 | 1 | 1 | 1 | 1 | 1338685-1 | PAWL, FEED | 56 |
| - | - | - | - | - | - | - | - | - | 55 |
| - | 4 | 4 | 4 | 4 | 4 | 4 | 18024-8 | SCR, BTN SKT HD CAP (M4 X 12.0) | 54 |
| - | 2 | 2 | 2 | 2 | 2 | 2 | 1-18023-2 | SCR, SKT HD CAP M4 X 12.0 | 53 |
| - | 1 | 1 | 1 | 1 | 1 | 1 | 18030-1 | NUT, HEX, REG M3 | 52 |
| - | 1 | 1 | 1 | 1 | 1 | 1 | 811242-5 | BUMPER, HOLD DOWN | 51 |
| - | 1 | 1 | 1 | 1 | 1 | 1 | 690753-2 | SPACER, TONKER | 50 |
| - | 1 | 1 | 1 | 1 | 1 | 1 | 18024-3 | SCR, BTN SKT HD CAP (M3 X 10.0) | 49 |
| - | - | 1 | - | - | 1 | - | 1338675-1 | CAM, UNIVERSAL PRE FEED | 48 |
| - | 1 | - | 1 | 1 | - | 1 | 1338676-1 | CAM, UNIVERSAL POST-FEED | 47 |
| - | 1 | 1 | 1 | 1 | 1 | 1 | 1320999-3 | APPLICATOR SUBASSEMBLY, HDI | 46 |
| - | 1 | 1 | 1 | 1 | 1 | 1 | 690191-1 | PLUG,NYLON | 45 |
| - | 1 | 1 | 1 | 1 | 1 | 1 | 1338660-1 | RAM | 44 |
| - | - | - | - | - | - | - | - | - | 43 |
| - | - | - | - | - | - | - | - | - | 42 |
| - | 1 | 1 | 1 | 1 | 1 | 1 | 2-18024-6 | SCR, BTN SKT HD CAP (M8 X 25.0) | 41 |
| - | - | - | - | - | - | - | - | - | 40 |
| - | 1 | 1 | 1 | 1 | 1 | 1 | 690125-1 | SHIM SUB-ASSY | 39 |
| - | 1 | 1 | 1 | 1 | 1 | 1 | 469367-1 | SHIM | 38 |
| - | 1 | 1 | 1 | 1 | 1 | 1 | 879103-3 | FINE ADJUST HEAD ASSEMBLY | 37 |
| - | - | - | - | - | - | - | - | - | 36 |
| - | - | - | - | - | - | - | - | - | 35 |
| - | 1 | 1 | 1 | 1 | 1 | 1 | 1320934-1 | SUPPORT, TERMINAL | 34 |
| - | 2 | 2 | 2 | 2 | 2 | 2 | 1-18024-0 | SCR, BTN SKT HD CAP (M4 X 20.0) | 33 |
| - | 1 | 1 | 1 | 1 | 1 | 1 | 18027-2 | WASHER, FLAT, REG M4 | 32 |
| - | 1 | 1 | 1 | 1 | 1 | 1 | 1-18023-2 | SCR, SKT HD CAP M4 X 12.0 | 31 |
| - | 1 | 1 | 1 | 1 | 1 | 1 | 1320908-3 | SPACER, STRIP GUIDE | 30 |
| - | 1 | 1 | 1 | 1 | 1 | 1 | 1633073-1 | STRIP GUIDE ASSEMBLY | 29 |
| - | 1 | 1 | 1 | 1 | 1 | 1 | 1-455888-0 | SPACER, CRIMPER | 28 |
| - | 2 | 2 | 2 | 2 | 2 | 2 | 1-22284-0 | SPRING, COMPRESSION | 27 |
| - | 1 | 1 | 1 | 1 | 1 | 1 | 356835-1 | LEVER, DRAG RELEASE | 26 |
| - | 1 | 1 | 1 | 1 | 1 | 1 | 240792-1 | DRAG, TERMINAL | 25 |
| - | 1 | 1 | 1 | 1 | 1 | 1 | 1320928-2 | PLATE, STRIP GUIDE | 24 |
| - | 1 | 1 | 1 | 1 | 1 | 1 | 980371-4 | SCR, SKT HD SHLDR 5.0 DIA X 6.0 | 23 |
| - | 1 | - | 1 | 1 | - | 1 | 690472-2 | STRIPPER | 22 |
| - | 1 | 1 | 1 | 1 | 1 | 1 | 1-18023-1 | SCR, SKT HD CAP M4 X 10.0 | 21 |
| - | 4 | 4 | 4 | 4 | 4 | 4 | 18025-2 | WASHER, SPRG LOCK, REG M4 | 20 |
| - | - | 1 | - | - | 1 | - | 690472-1 | STRIPPER | 19 |
| - | - | - | - | - | - | - | - | - | 18 |
| 1 | - | 1 | - | - | 1 | - | 1338684-1 | SHEAR HOLDER, FRONT | 17 |
| - | - | - | - | - | - | - | - | - | 16 |
| - | - | - | - | - | - | - | - | - | 15 |
| - | - | - | - | - | - | - | - | - | 14 |
| - | - | - | - | - | - | - | - | - | 13 |
| - | 1 | 1 | 1 | 1 | 1 | 1 | 3-22280-3 | SPRING, COMPRESSION | 12 |
| - | 1 | 1 | 1 | 1 | 1 | 1 | 356885-4 | STOP, SHEAR | 11 |
| 1 | - | 1 | 1 | - | 1 | 1 | 1320921-1 | SHEAR HOLDER, FRONT, CUT | 10 |
| 1 | - | 1 | 1 | 1 | 1 | 1 | 462006-1 | FLOATING SHEAR, FRONT | 9 |
| 1 | 2 | 2 | 2 | 1 | 1 | 1 | 9-1633138-0 | ANVIL, COMBINATION | 8 |
| - | - | - | - | - | - | - | - | - | 7 |
| - | - | - | - | - | - | - | - | - | 6 |
| - | 1 | 1 | 1 | 1 | 1 | 1 | 2-455889-0 | DEPRESSOR, SHEAR | 5 |
| - | 1 | 1 | 1 | 1 | 1 | 1 | 238011-2 | BLOCK, CRIMPER SPACER | 4 |
| 1 | 2 | 2 | 2 | 1 | 1 | 1 | 1-456134-4 | CRIMPER, INSULATION F PREMIUM | 3 |
| - | 1 | 1 | 1 | 1 | 1 | 1 | 1-455888-4 | SPACER, CRIMPER | 2 |
| 1 | 2 | 2 | 2 | 1 | 1 | 1 | 2-1633588-7 | CRIMPER, WIRE | 1 |
| -77 | -76 | -72 | -71 | -6 | -2 | -1 | PART NO | DESCRIPTION | ITEM NO |

THIS DRAWING IS A CONTROLLED DOCUMENT FOR TYCO ELECTRONICS CORPORATION. IT IS SUBJECT TO CHANGE AND THE CONTROLLING ENGINEERING ORGANIZATION SHOULD BE CONTACTED FOR THE LATEST REVISION.

DIMENSIONS: mm [IN]
TOLERANCES UNLESS OTHERWISE SPECIFIED: 0 PLC ±- ; 1 PLC ±- ; 2 PLC ±- ; 3 PLC ±- ; 4 PLC ±- ; ANGLES ±-
MATERIAL - -
FINISH - -

DWN L.LOFTHOUSE 03JUN2008
CHK -
APVD M.CLIFFORD 03JUN2008
PRODUCT SPEC -
APPLICATION SPEC See Table
WEIGHT -

Tyco Electronics
Tyco Electronics
Harrisburg, PA 17105-3608

NAME FINE ADJUST SIDE FEED HDI APPLICATOR -

| SIZE | CAGE CODE | DRAWING NO | RESTRICTED TO |
|---|---|---|---|
| A1 | 00779 | C-1528905 | - |

CUSTOMER DRAWING | SCALE 3:5 | SHEET 1 OF 1 | REV A

AMP 4805 REV 31MAR2000

Pro/ENGINEER DRAWING