TS27L2C,I,M

PRECISION VERY LOW POWER CMOS DUAL OPERATIONAL AMPLIFIERS

- VERY LOW POWER CONSUMPTION : **10µA/op**
- OUTPUT VOLTAGE CAN SWING TO GROUND
- EXCELLENT PHASE MARGIN ON CAPACITIVE LOADS
- STABLE AND LOW OFFSET VOLTAGE
- THREE INPUT OFFSET VOLTAGE SELECTIONS

N
DIP8
(Plastic Package**)**

D
SO8
(Plastic Micropackage**)**

P
TSSOP8
(Thin Shrink Small Outline Package)

DESCRIPTION

These devices are low cost, low power dual operational amplifiers designed to operate with single or dual supplies. These operational amplifiers use the ST silicon gate CMOS process allowing an excellent consumption-speed ratio. These series are ideally suited for low consumption applications.

Three power consumptions are available allowing to have always the best consumption-speed ratio:

- ❑ I_{CC} = 10µA/amp.: TS27L2 (very low power)
- ❑ I_{CC} = 150µA/amp.: TS27M2 (low power)
- ❑ I_{CC} = 1mA/amp.: TS272 (standard)

These CMOS amplifiers offer very high input impedance and extremely low input currents. The major advantage versus JFET devices is the very low input currents drift with temperature (see figure 2).

ORDER CODE

Part Number	Temperature Range	Package		
		N	D	P
TS27L2C/AC/BC	0°C, +70°C	•	•	•
TS27L2I/AI/BI	-40°C, +125°C	•	•	•
TS27L2M/AM/BM	-55°C, +125°C	•	•	•
Example : TS27L2ACN				

N = Dual in Line Package (DIP)
D = Small Outline Package (SO) - also available in Tape & Reel (DT)
P = Thin Shrink Small Outline Package (TSSOP) - only available in Tape & Reel (PT)

PIN CONNECTIONS (top view)

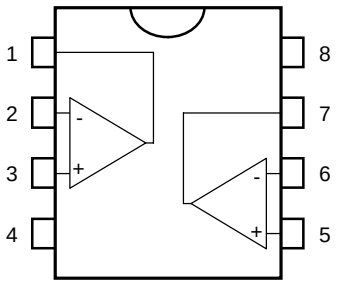

1 - Output 1
2 - Inverting Input 1
3 - Non-inverting Input 1
4 - V_{CC}^{-}
5 - Non-inverting Input 2
6 - Inverting Input 2
7 - Output 2
8 - V_{CC}^{+}

BLOCK DIAGRAM

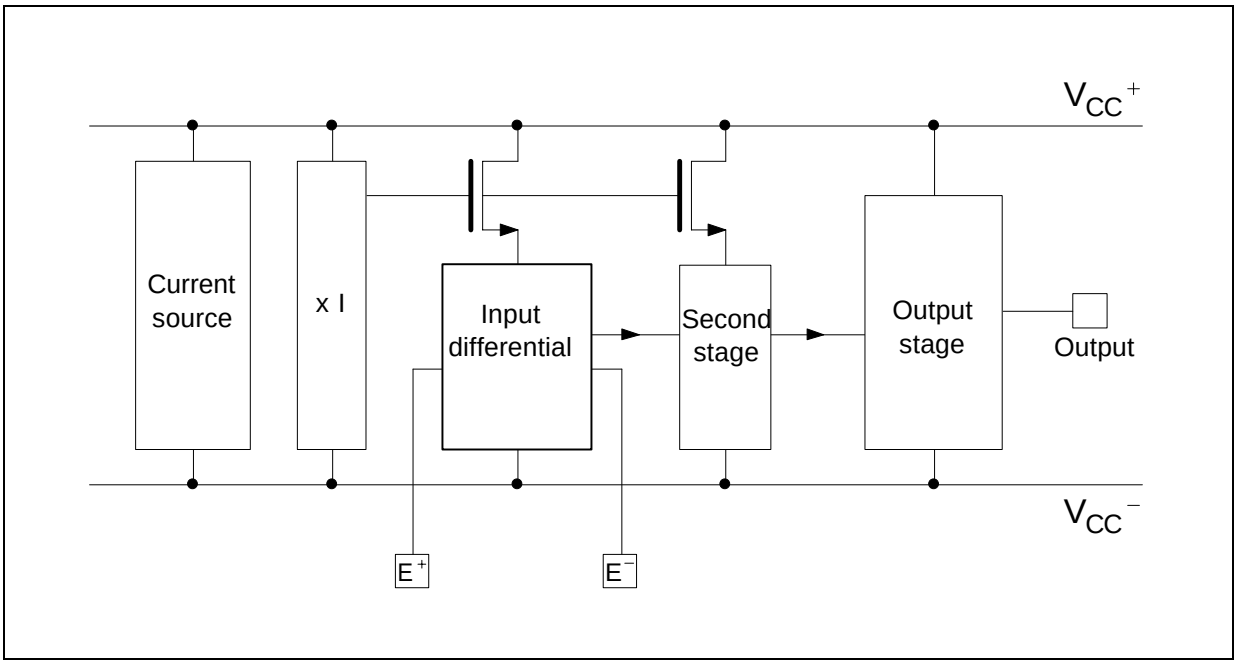

ABSOLUTE MAXIMUM RATINGS

Symbol	Parameter	TS27L2C/AC/BC	TS27L2I/AI/BI	TS27L2M/AM/BM	Unit
V_{CC}^+	Supply Voltage [1]	18			V
V_{id}	Differential Input Voltage [2]	±18			V
V_i	Input Voltage [3]	-0.3 to 18			V
I_o	Output Current for $V_{CC}^+ \geq 15V$	±30			mA
I_{in}	Input Current	±5			mA
T_{oper}	Operating Free-Air Temperature Range	0 to +70	-40 to +125	-55 to +125	°C
T_{stg}	Storage Temperature Range	-65 to +150			°C

1. All values, except differential voltage are with respect to network ground terminal.
2. Differential voltages are the non-inverting input terminal with respect to the inverting input terminal.
3. The magnitude of the input and the output voltages must never exceed the magnitude of the positive supply voltage.

OPERATING CONDITIONS

Symbol	Parameter	Value	Unit
V_{CC}^+	Supply Voltage	3 to 16	V
V_{icm}	Common Mode Input Voltage Range	0 to V_{CC}^+ - 1.5	V

SCHEMATIC DIAGRAM (for 1/2 TS27L2)

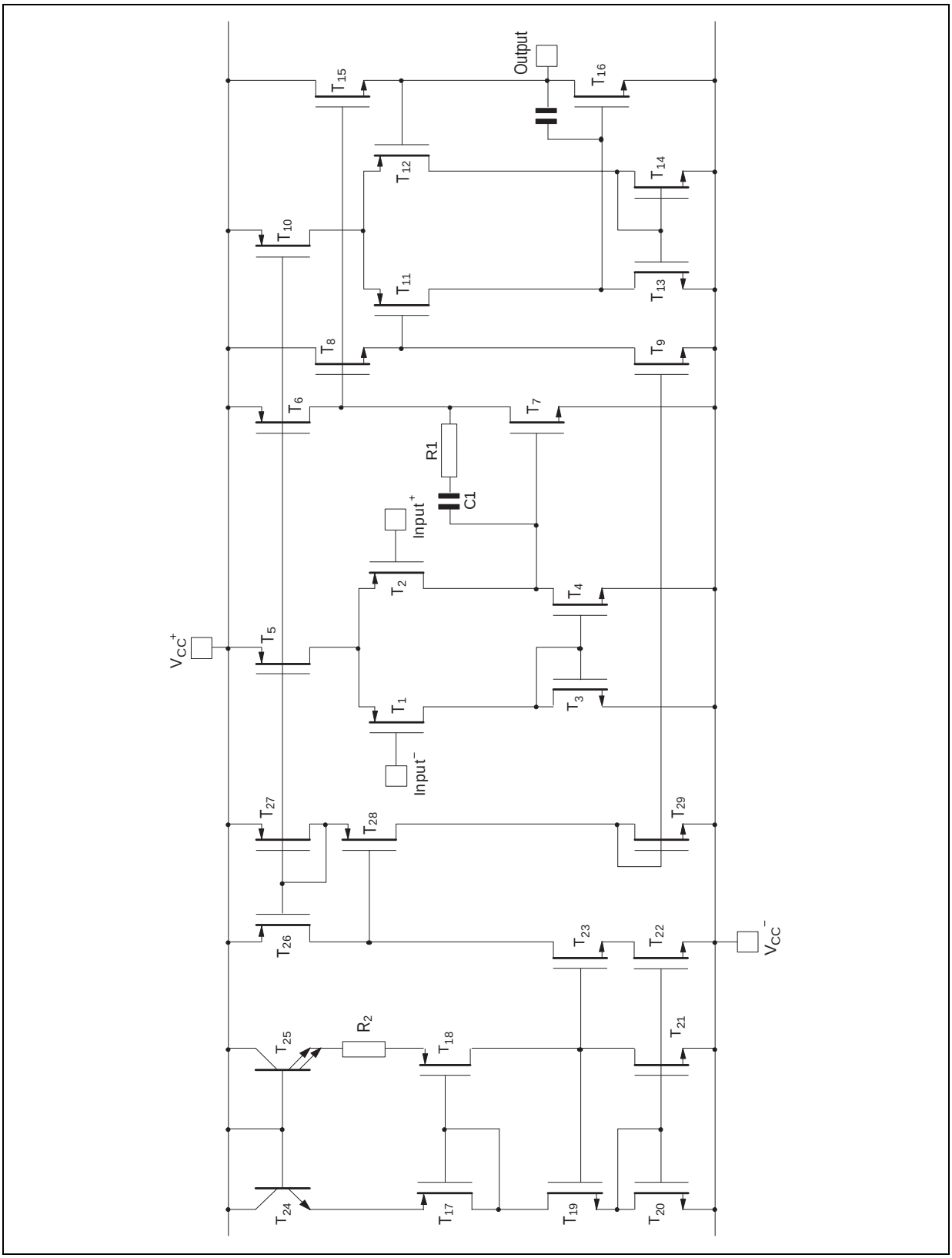

ELECTRICAL CHARACTERISTICS

V_{CC}^{+} = +10V, V_{CC}^{-}= 0V, T_{amb} = +25°C (unless otherwise specified)

Symbol	Parameter	TS27L2C/AC/BC			TS27L2I/AI/BI TS27L2M/AM/BM			Unit
		Min.	Typ.	Max.	Min.	Typ.	Max.	
V_{io}	Input Offset Voltage V_O = 1.4V, V_{ic} = 0V TS27L2C/I/M TS27L2AC/AI/AM TS27L2B/C/I/M $T_{min} \le T_{amb} \le T_{max}$ TS27L2C/I/M TS27L2AC/AI/AM TS27L2B/C/I/M		1.1 0.9 0.25	10 5 2 12 6.5 3		1.1 0.9 0.25	10 5 2 12 6.5 3.5	mV
DV_{io}	Input Offset Voltage Drift		2			2		µV/°C
I_{io}	Input Offset Current note [1)] V_{ic} = 5V, V_O = 5V $T_{min} \le T_{amb} \le T_{max}$		1	 100		1	 200	pA
I_{ib}	Input Bias Current - see note 1 V_{ic} = 5V, V_O = 5V $T_{min} \le T_{amb} \le T_{max}$		1	 150		1	 300	pA
V_{OH}	High Level Output Voltage V_{id} = 100mV, R_L = 1MΩ $T_{min} \le T_{amb} \le T_{max}$	8.8 8.7	9		8.8 8.6	9		V
V_{OL}	Low Level Output Voltage V_{id} = -100mV			50			50	mV
A_{vd}	Large Signal Voltage Gain V_{iC} = 5V, R_L = 1MΩ, V_o = 1V to 6V $T_{min} \le T_{amb} \le T_{max}$	60 45	100		60 40	100		V/mV
GBP	Gain Bandwidth Product A_v = 40dB, R_L = 1MΩ, C_L = 100pF, f_{in} = 100kHz		0.1			0.1		MHz
CMR	Common Mode Rejection Ratio V_{iC} = 1V to 7.4V, V_o = 1.4V	65	80		65	80		dB
SVR	Supply Voltage Rejection Ratio V_{CC}^{+} = 5V to 10V, V_o = 1.4V	60	80		60	80		dB
I_{CC}	Supply Current (per amplifier) A_v = 1, no load, V_o = 5V $T_{min} \le T_{amb} \le T_{max}$		10	15 17		10	15 18	µA
I_o	Output Short Circuit Current V_o = 0V, V_{id} = 100mV		60			60		mA
I_{sink}	Output Sink Current V_o = V_{CC}, V_{id} = -100mV		45			45		mA
SR	Slew Rate at Unity Gain R_L = 1MΩ, C_L = 100pF, V_i = 3 to 7V		0.04			0.04		V/µs
ϕm	Phase Margin at Unity Gain A_v = 40dB, R_L = 1MΩ, C_L = 100pF		45			45		Degrees
K_{OV}	Overshoot Factor		30			30		%
e_n	Equivalent Input Noise Voltage f = 1kHz, R_S = 100Ω		68			68		$\frac{nV}{\sqrt{Hz}}$
V_{o1}/V_{o2}	Channel Separation		120			120		dB

1. Maximum values including unavoidable inaccuracies of the industrial test.

TYPICAL CHARACTERISTICS

Figure 1 : Supply Current (each amplifier) versus Supply Voltage

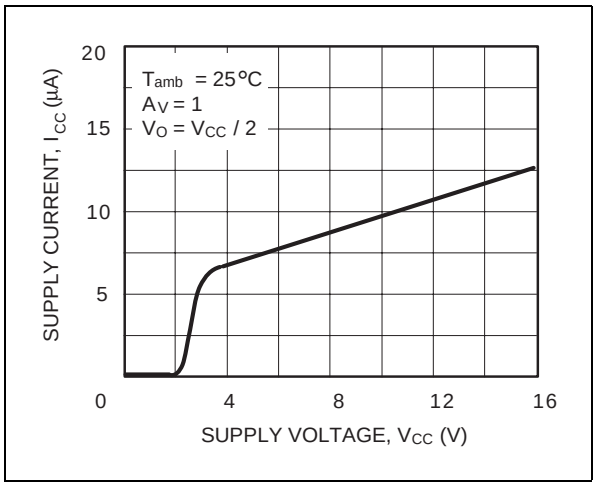

Figure 2 : Input Bias Current versus Free Air Temperature

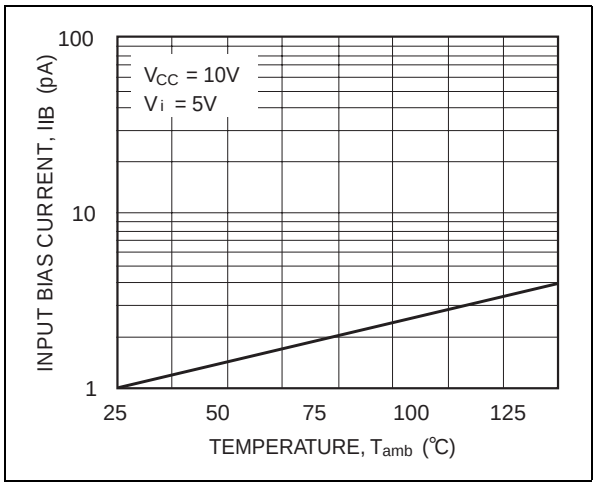

Figure 3a : High Level Output Voltage versus High Level Output Current

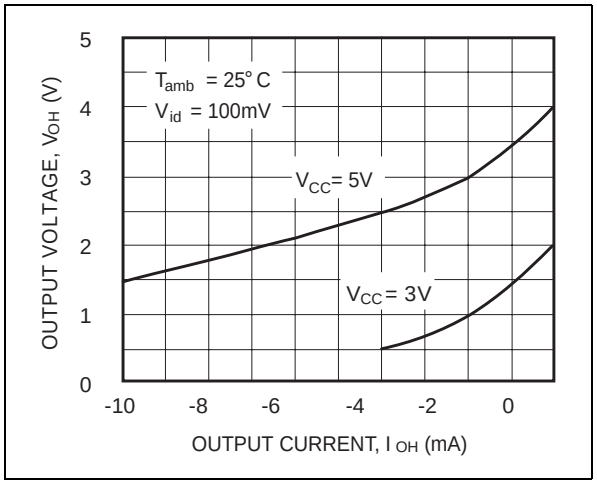

Figure 3b : High Level Output Voltage versus High Level Output Current

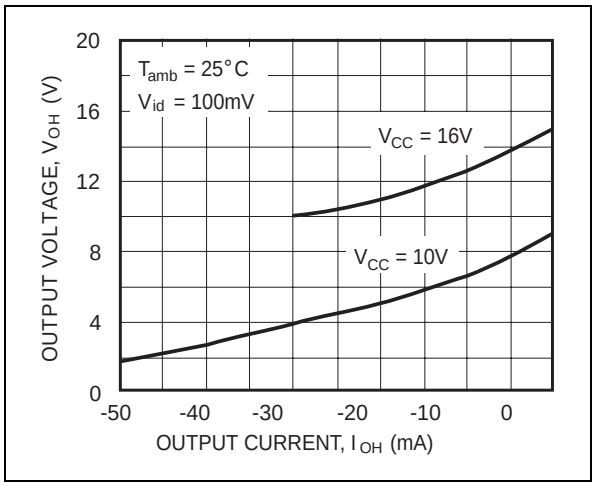

Figure 4a : Low Level Output Voltage versus Low Level Output Current

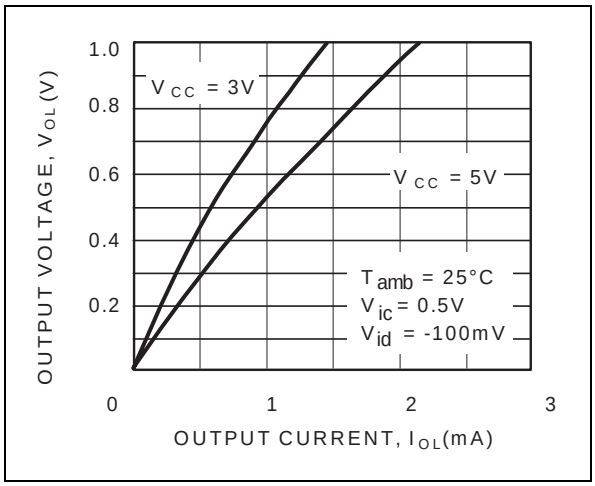

Figure 4b : Low Level Output Voltage versus Low Level Output Current

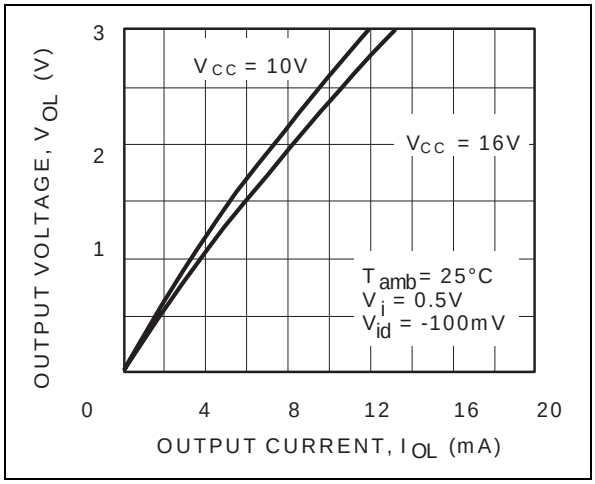

Figure 5 : Open Loop Frequency Response and Phase Shift

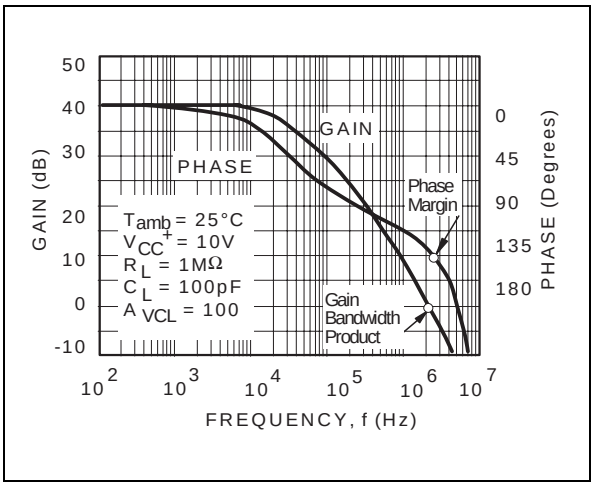

Figure 6 : Gain Bandwidth Product versus Supply Voltage

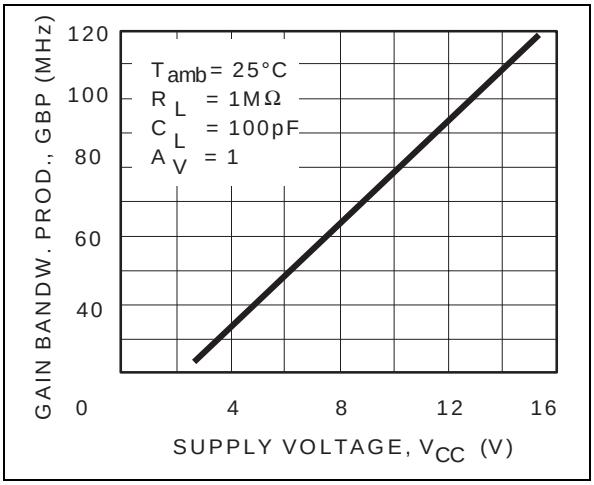

Figure 7 : Phase Margin versus Supply Voltage

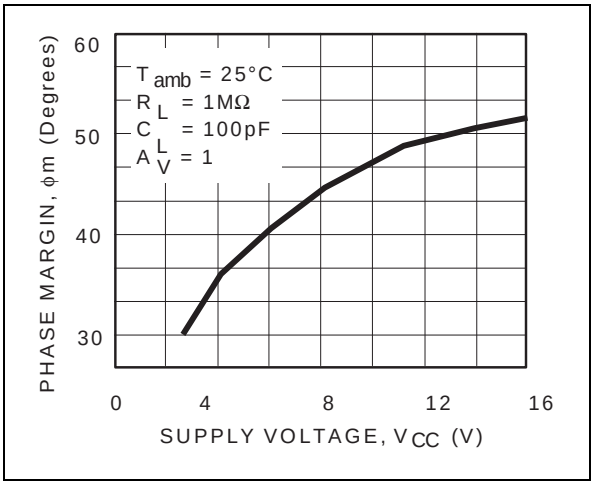

Figure 8 : Phase Margin versus Capacitive Load

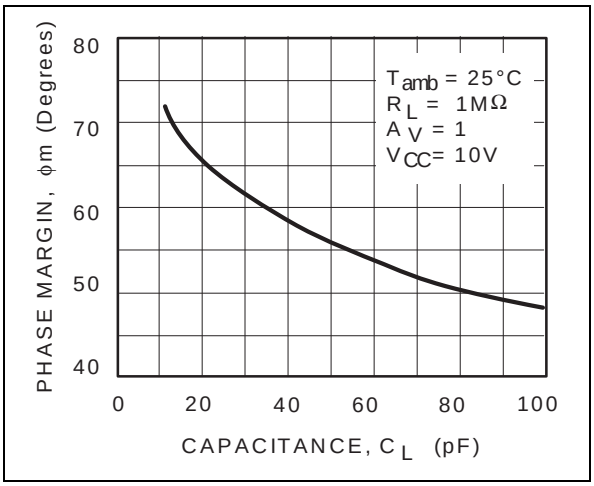

Figure 9 : Slew Rate versus Supply Voltage

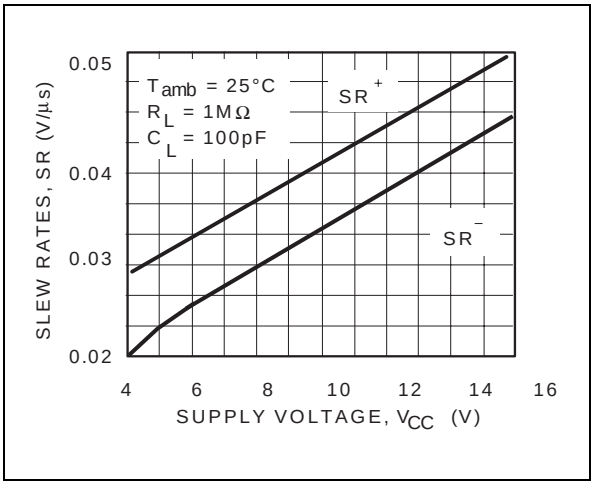

Figure 10 : Input Voltage Noise versus Frequency

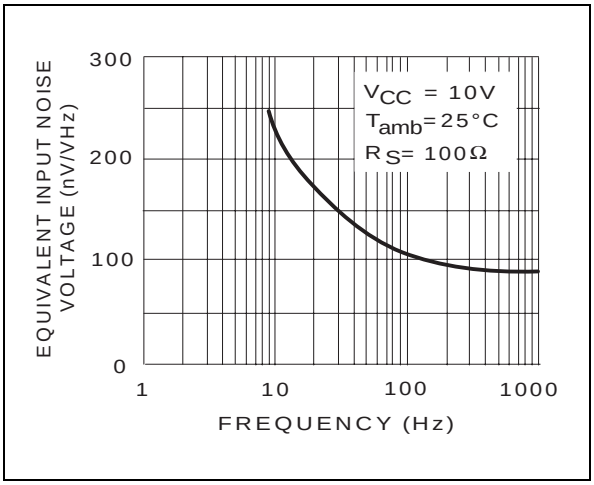

PACKAGE MECHANICAL DATA
8 PINS - PLASTIC DIP

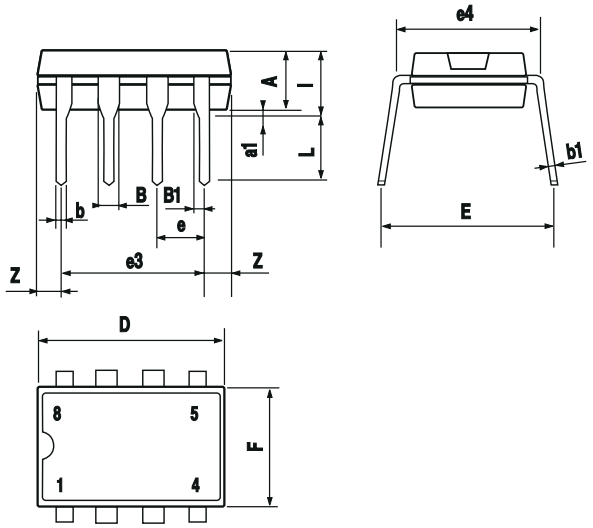

Dim.	Millimeters			Inches		
	Min.	Typ.	Max.	Min.	Typ.	Max.
A		3.32			0.131	
a1	0.51			0.020		
B	1.15		1.65	0.045		0.065
b	0.356		0.55	0.014		0.022
b1	0.204		0.304	0.008		0.012
D			10.92			0.430
E	7.95		9.75	0.313		0.384
e		2.54			0.100	
e3		7.62			0.300	
e4		7.62			0.300	
F			6.6			0260
i			5.08			0.200
L	3.18		3.81	0.125		0.150
Z			1.52			0.060

PACKAGE MECHANICAL DATA
8 PINS - PLASTIC MICROPACKAGE (SO)

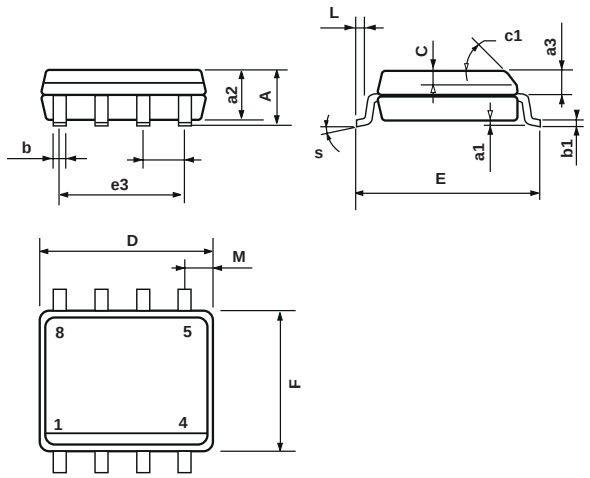

Dim.	Millimeters			Inches		
	Min.	Typ.	Max.	Min.	Typ.	Max.
A			1.75			0.069
a1	0.1		0.25	0.004		0.010
a2			1.65			0.065
a3	0.65		0.85	0.026		0.033
b	0.35		0.48	0.014		0.019
b1	0.19		0.25	0.007		0.010
C	0.25		0.5	0.010		0.020
c1	45° (typ.)					
D	4.8		5.0	0.189		0.197
E	5.8		6.2	0.228		0.244
e		1.27			0.050	
e3		3.81			0.150	
F	3.8		4.0	0.150		0.157
L	0.4		1.27	0.016		0.050
M			0.6			0.024
S	8° (max.)					

PACKAGE MECHANICAL DATA

8 PINS - THIN SHRINK SMALL OUTLINE PACKAGE (TSSOP)

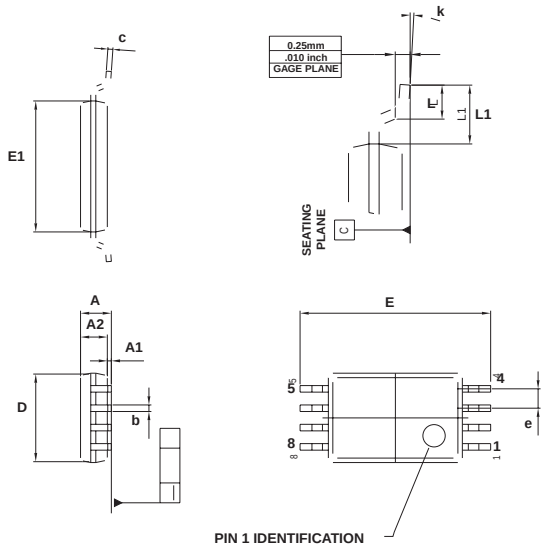

Dim.	Millimeters			Inches		
	Min.	Typ.	Max.	Min.	Typ.	Max.
A			1.20			0.05
A1	0.05		0.15	0.01		0.006
A2	0.80	1.00	1.05	0.031	0.039	0.041
b	0.19		0.30	0.007		0.15
c	0.09		0.20	0.003		0.012
D	2.90	3.00	3.10	0.114	0.118	0.122
E		6.40			0.252	
E1	4.30	4.40	4.50	0.169	0.173	0.177
e		0.65			0.025	
k	0°		8°	0°		8°
l	0.50	0.60	0.75	0.09	0.0236	0.030
L	0.45	0.600	0.75	0.018	0.024	0.030
L1		1.000			0.039	

Information furnished is believed to be accurate and reliable. However, STMicroelectronics assumes no responsibility for the consequences of use of such information nor for any infringement of patents or other rights of third parties which may result from its use. No license is granted by implication or otherwise under any patent or patent rights of STMicroelectronics. Specifications mentioned in this publication are subject to change without notice. This publication supersedes and replaces all information previously supplied. STMicroelectronics products are not authorized for use as critical components in life support devices or systems without express written approval of STMicroelectronics.

© The ST logo is a registered trademark of STMicroelectronics

© 2001 STMicroelectronics - Printed in Italy - All Rights Reserved
STMicroelectronics GROUP OF COMPANIES
Australia - Brazil - Canada - China - Finland - France - Germany - Hong Kong - India - Israel - Italy - Japan - Malaysia
Malta - Morocco - Singapore - Spain - Sweden - Switzerland - United Kingdom - United States
© http://www.st.com