MEFTRONICS

LC-SPI-DCI-BB-1

Datasheet

Description:
The LC-SPI-DCI-BB-1 is a Teensy based daughter board that provides computational power, tactile and visual interface, and easy I/O connection to any “BB” Meftronics inverter, further expediting development and allowing the developer to focus solely on controls programming. System features include:

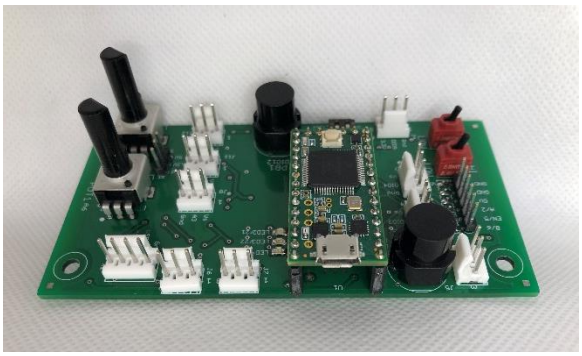

- Directly interfaces with inverter, plugging into monitor pins
- Compatible with Teensy 3.2 and 4.0
- Two potentiometers
- Two toggle switches
- Two push buttons
- Two DIP switches
- Four LEDs of different colors
- Up to nine analog inputs
- Up to nine digital I/O, including I2C

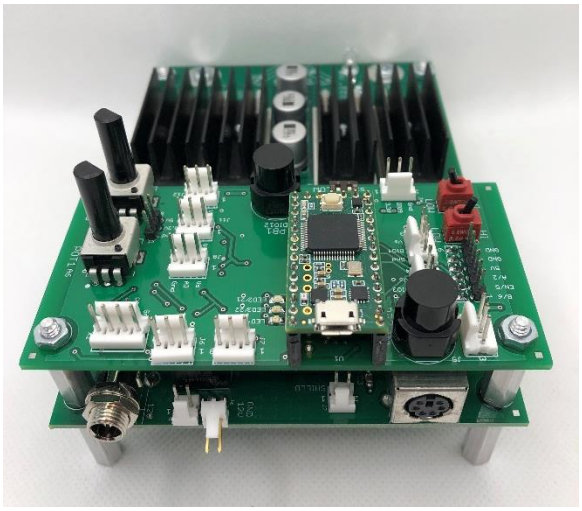

The addition of a microcontroller to a Meftronics inverter makes the platform very flexible and able to stand alone without the need for a separate control system. Applications include using the system as a buck-converter, boost-converter, motor driver, LED driver, sine-wave inverter, class-D amplifier, and many other countless applications.

Analog Inputs

Analog Pin	Description	PCB Reference
A0	Potentiometer	POT2
A1	General Purpose Analog Input	J12
A2	General Purpose Analog Input	J11
A3	General Purpose Analog Input	J8
A4	General Purpose Analog Input	X2
A5	General Purpose Analog Input	X2
A6	Potentiometer	POT1
A10	General Purpose Analog Input	J7
A11	General Purpose Analog Input	J6

Digital Inputs and Outputs

Digital I/O	Description	PCB Reference
0	Push-Button	PB2
1	General Purpose Digital I/O	J5
2	Phase A	SV1/SV5
3	General Purpose Digital I/O	J14
4	General Purpose Digital I/O	J13
5	Inverter Enable	SV1/SV5
6	Phase B	SV1/SV5
7	Toggle Switch	SW2
8	Toggle Switch	SW1
9	General Purpose Digital I/O	J4
10	DIP Switch	S3
11	DIP Switch	S3
12	Push-Button	PB1
13	Orange LED	
15	General Purpose Digital I/O	J12
16	General Purpose Digital I/O	J11
17	General Purpose Digital I/O	J8
18	SDA/General Purpose Digital I/O	X2
19	SCL/General Purpose Digital I/O	X2
21	Blue LED	LED2
22	Red LED	LED3
23	Green LED	LED4

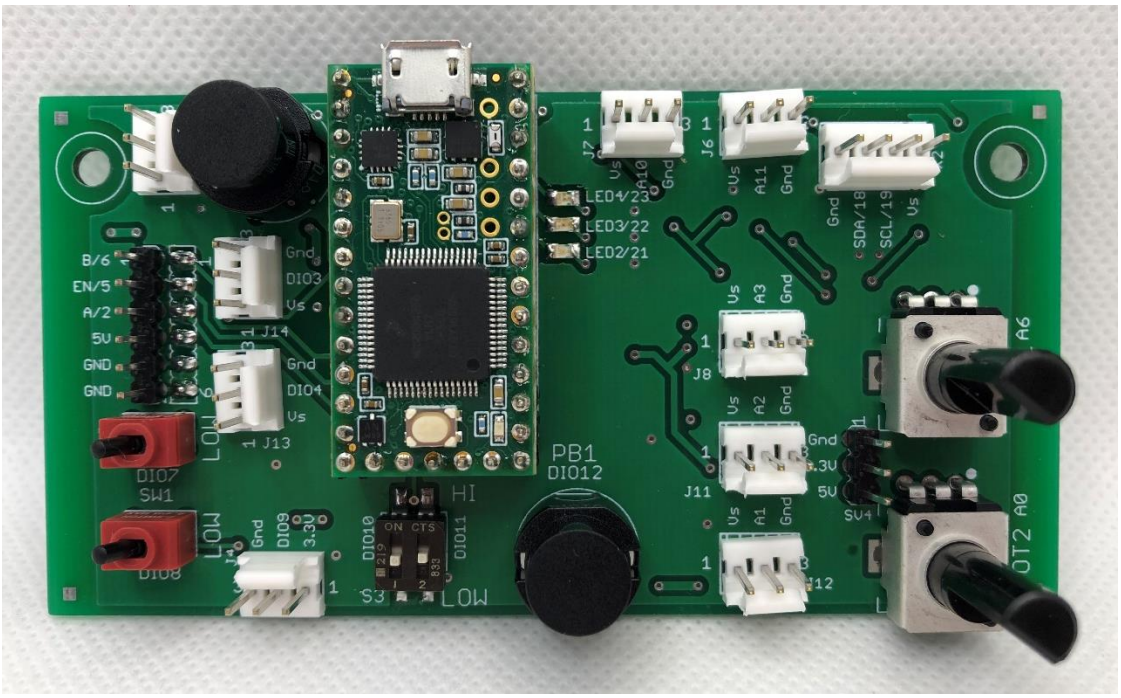
B/6
EN/5
A/2
5V
GND
GND
DIO3
DIO4
J14
J13
DIO7
SW1
DIO8
LOW
DIO9
3.3V
DIO10
DIO11
S3
HI
LOW
PB1
DIO12
LED4/23
LED3/22
LED2/21
J7
J6
A11
SDA/18
SCL/19
A3
J8
A2
J11
A1
J12
A6
OT2 A0
SV4

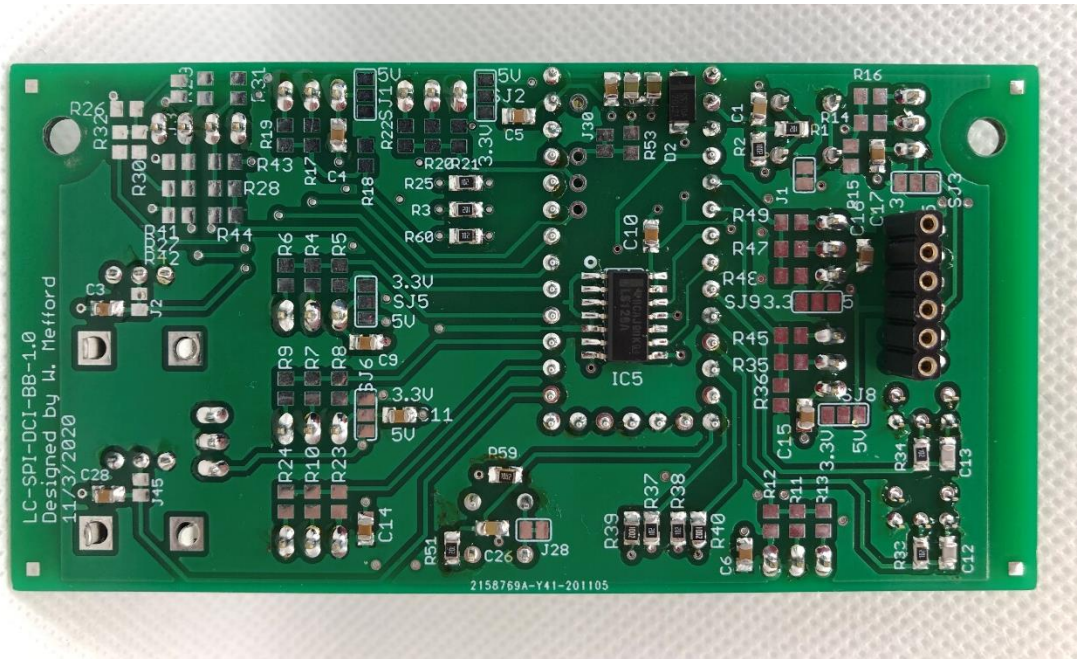
LC-SPI-DCI-BB-1.0
Designed by W. Mefford
11/3/2020
IC5
SJ5
SJ6
SJ8
SJ9
SJ3
3.3V
5V
2158769A-Y41-201105

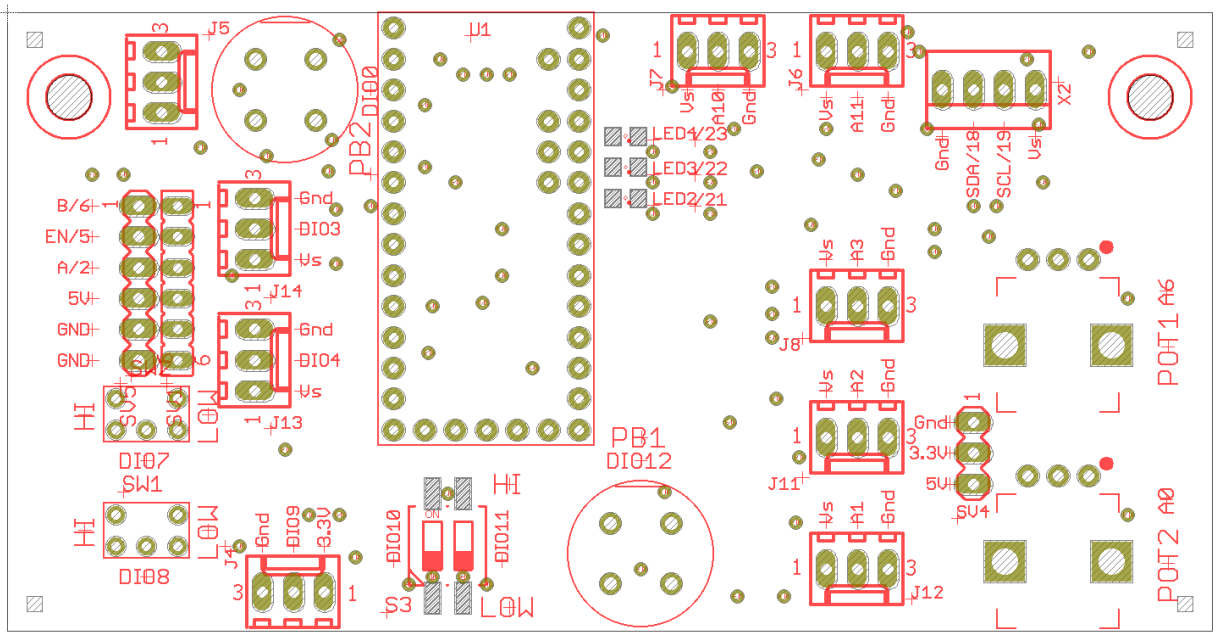
J5
U1
PB2
DIO0
J7
J6
X2
LED4/23
LED3/22
LED2/21
SDA/18
SCL/19
B/6
EN/5
A/2
5V
GND
GND
J14
J13
DIO3
DIO4
HI
LOW
DIO7
SW1
DIO8
J4
DIO9
3.3V
DIO10
DIO11
S3
PB1
DIO12
J8
J11
J12
SV4
POT1 A6
POT2 A0

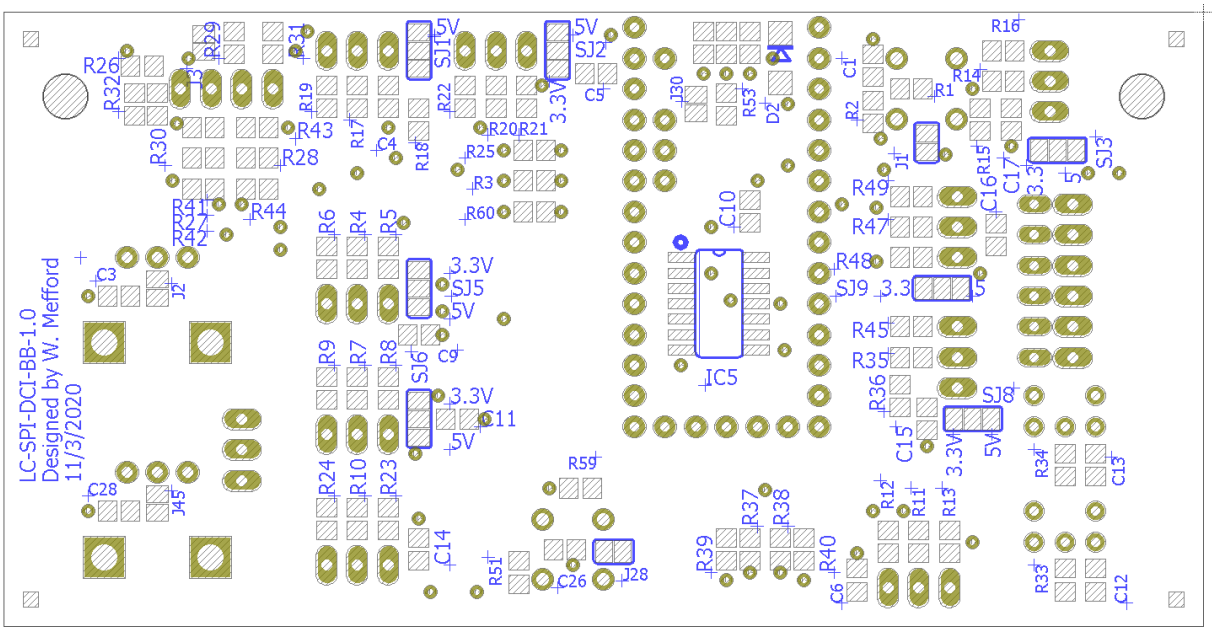
LC-SPI-DCI-BB-1.0
Designed by W. Mefford
11/3/2020
IC5
SJ1
SJ2
SJ3
SJ5
SJ6
SJ8
SJ9
3.3V
5V

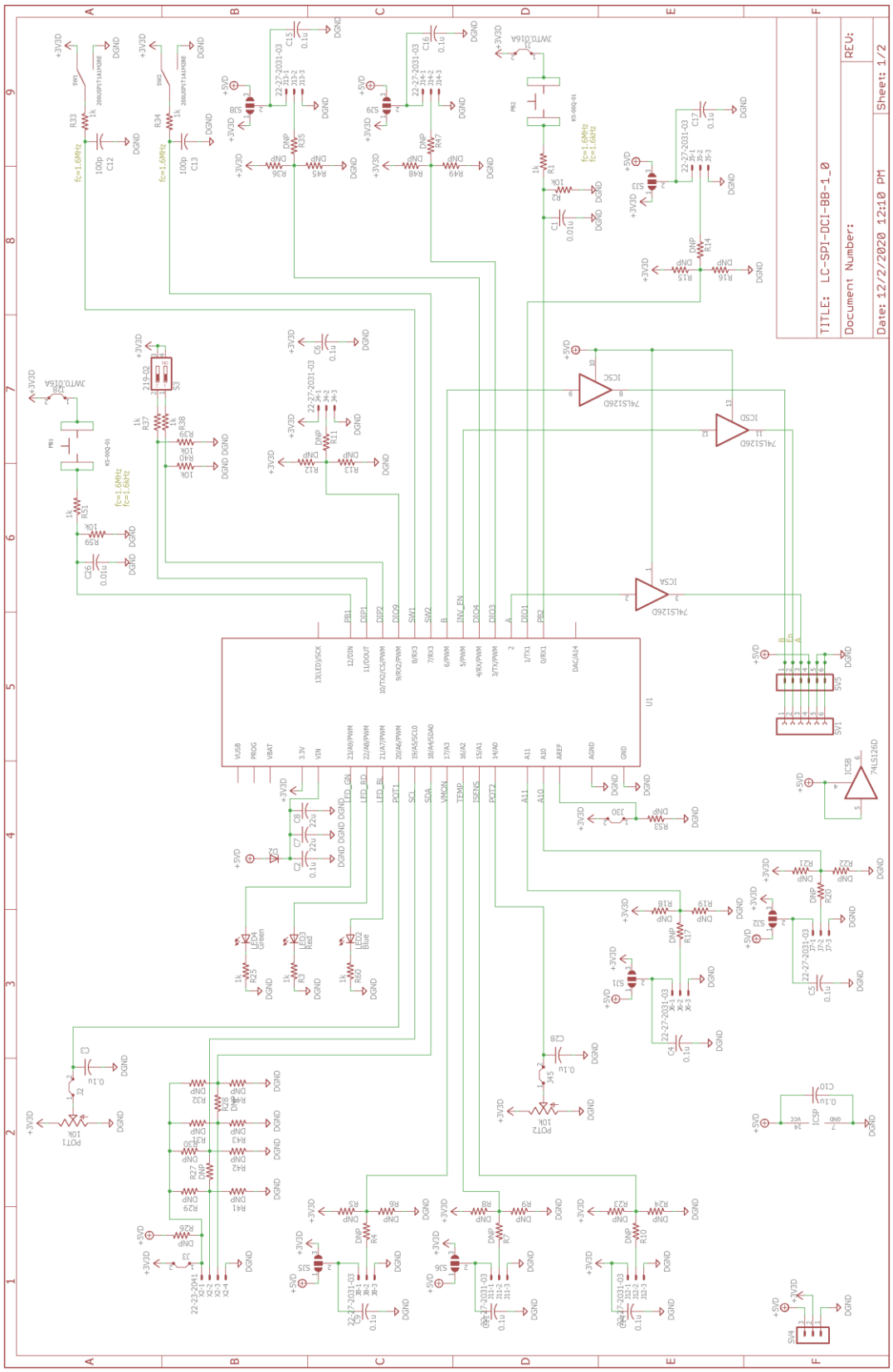
TITLE: LC-SPI-DCI-BB-1_0
Document Number:
REV:
Date: 12/2/2020 12:10 PM
Sheet: 1/2

Application Information

1. Architecture

The LC-SPI-DCI-BB-1 is designed to perform three tasks. First, seamlessly connect a Teensy to the inverter, giving the inverter computational power. Second, provide the developer or user with a way to control and interact with the inverter through common tactile interfaces and LEDs. And third, provide a simple and flexible way to connect sensors to the Teensy, allowing for controls feedback.

The footprint on the PCB accommodates both the Teensy 3.2 and the Teensy 4.0. Plugging the board into the inverter's signal monitors connects the Teensy through buffers to the control lines of the inverter. The board is in return supplied by the 5V regulator on the inverter, and the 3.3V that the Teensy operates at is provided by the regulator on the Teensy itself.

Connections to interfaces are already made giving the user several ways to interact with the inverter. The switches, buttons, and potentiometers are low-pass filtered so that no debouncing or digital filtering should be required to accurately read input states. An abridged table of interface pins is printed below.

Input		Reference
A0		POT2
A6		POT1
DIO0		PB2
DIO7		SW2
DIO8		SW1
DIO10		DIP2
DIO11		DIP1
DIO12		PB1

Output		Reference
DIO2		A
DIO5		INV EN
DIO6		B
DIO21		LED BLUE
DIO22		LED RED
DIO23		LED GREEN

Connectors are provided to bring digital and analog peripherals into the Teensy. Each connector has a supply and ground pin, as well as positions for a pull-up resistor, a pull-down resistor, a voltage divider, or a filter. The supply pin may be connected via solder jumper to either the 3.3V supply or the 5V supply. When connecting an input to the board, it is important to keep in mind that the Teensy expects inputs to be between 0V and 3.3V.

2. Connecting Peripherals

As stated before, each accessible Teensy I/O has a connector, configurable supply, and positions for resistors. An example is shown in the schematic below.

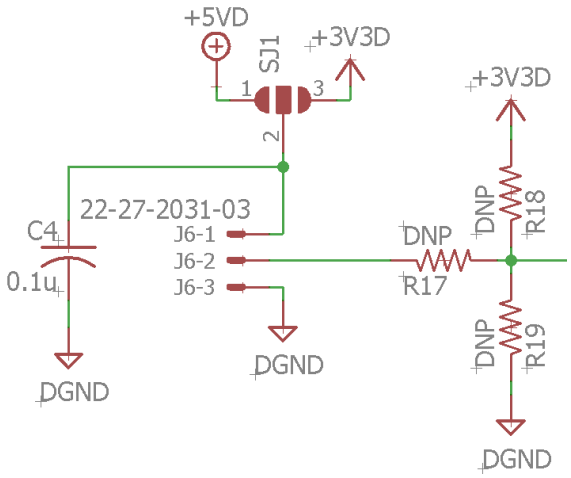

As manufactured, no I/O resistors are populated and none of the supply pins are connected. At the very least, the series resistor position will need to be populated or

jumpered to gain access to the Teensy. In this example, that would be R17. These resistors and jumpers are on the bottom side of the board next to their respective connectors. Labeling is printed in the silkscreen where it could be afforded.

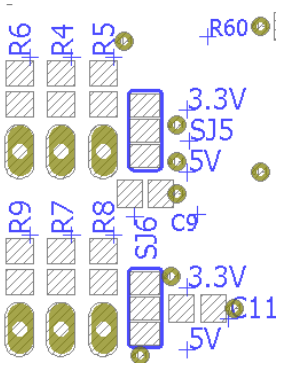

Most external connections to the Teensy are made through three pin connectors, but DIO18 and DIO19 go through a four pin connector and have a slightly different resistor network to accommodate I2C communication and make the pins more flexible.

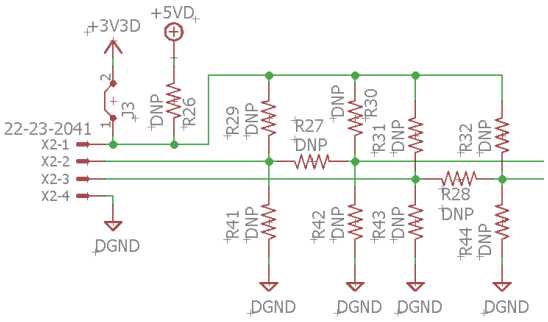

3. Grounding, Hazards, and Protection

The LC-SPI-DCI-BB-1 is connected to the inverter's ground through the monitor pins. It is important to keep in mind that in non-isolated Meftronics inverters, this ground is tied to the negative DC bus in the power portion of the inverter. The references of external devices may conflict with this arrangement if care is not taken. Possible conflicts may arise from a connected sensor, an oscilloscope probe, or worse, through the USB cable used to program and monitor the Teensy. There is also an electrical shock hazard if the module is "floating" and the user attempts to use the tactile interfaces. In general, it is recommended that the negative DC bus be tied to ground and a USB isolator used when connecting a computer to the Teensy.

4. Recommended Parts for Self-Assembly

Description	Manufacturer	Part #
Toggle Switch	E-Switch	200USP1T1 A1M2RE
DIP Switch	CTS	219-2MST
Push-Button	C&K	D6R90 F1 LFS
Potentiometer	Bourns Inc.	PTV09A-4025F-B103
Standoff	RAF Electronic Hardware	4538-632-AL
Female Socket	Mill-Max	801-47-020-10-001000