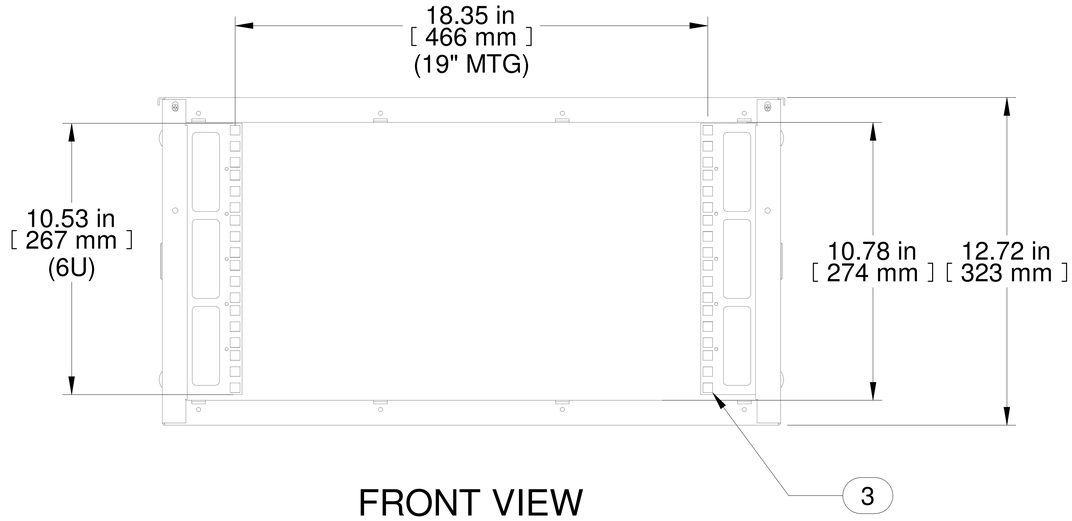

FRONT VIEW

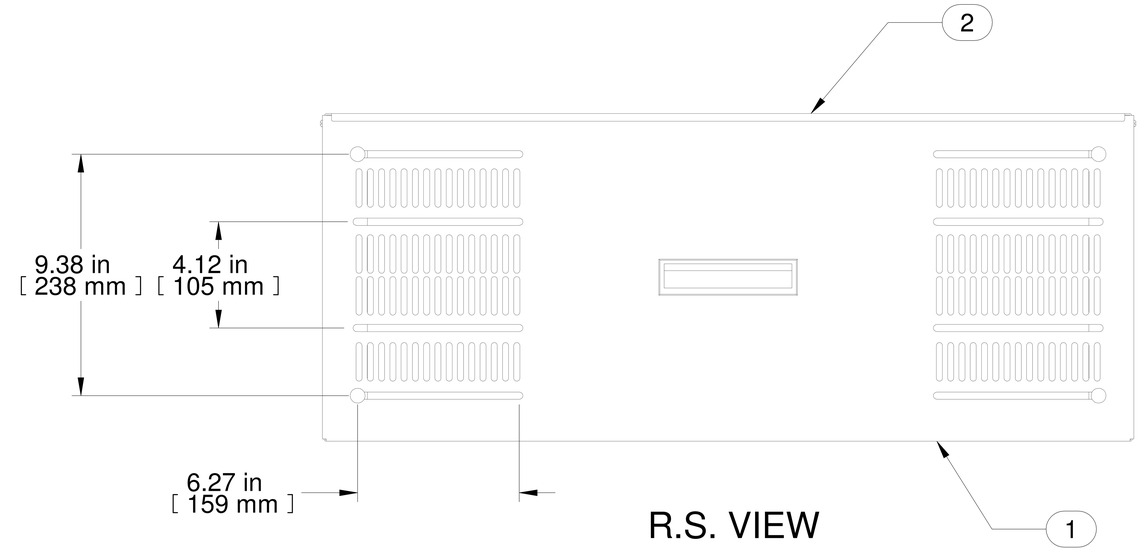

R.S. VIEW

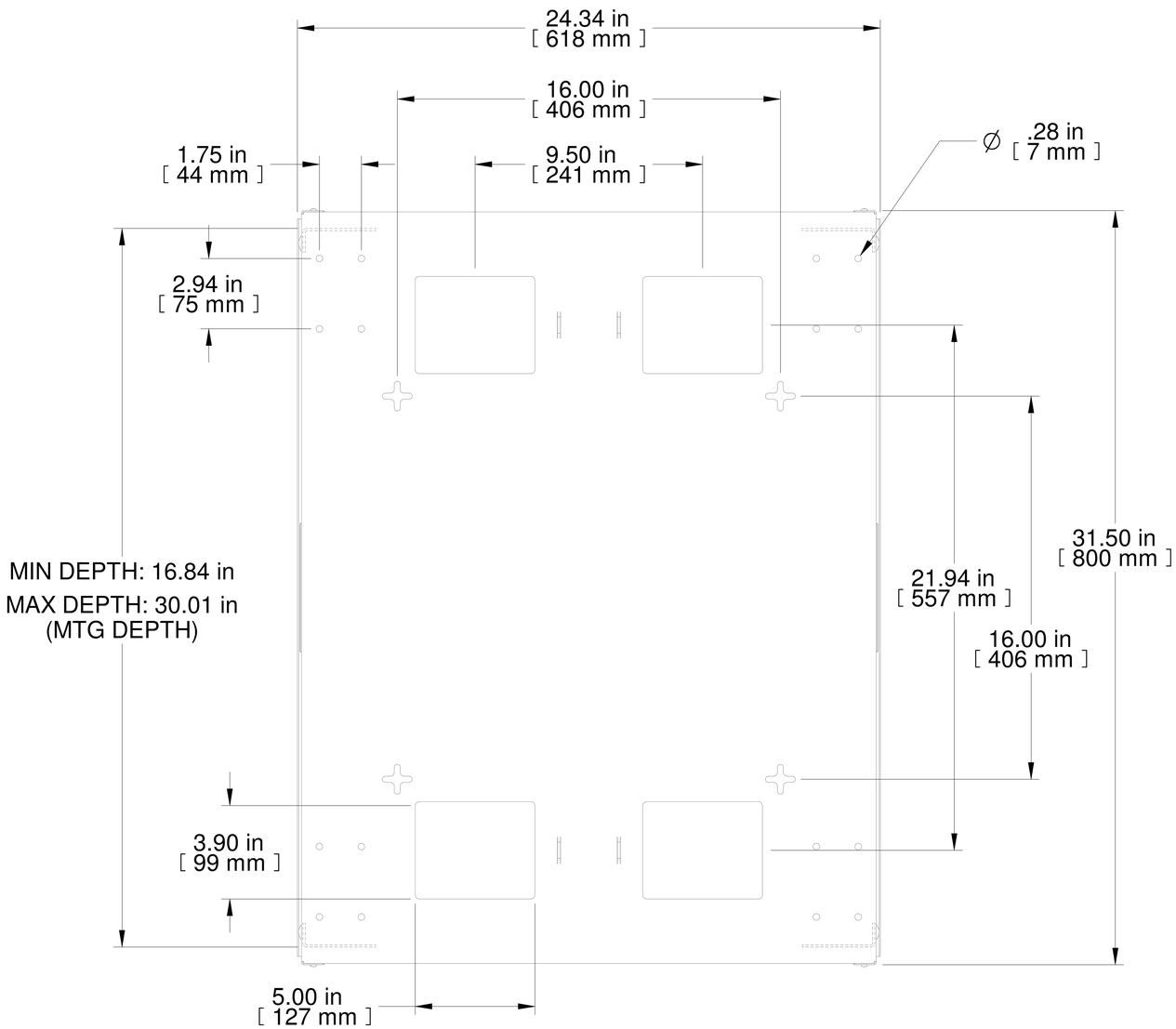

BOTTOM VIEW

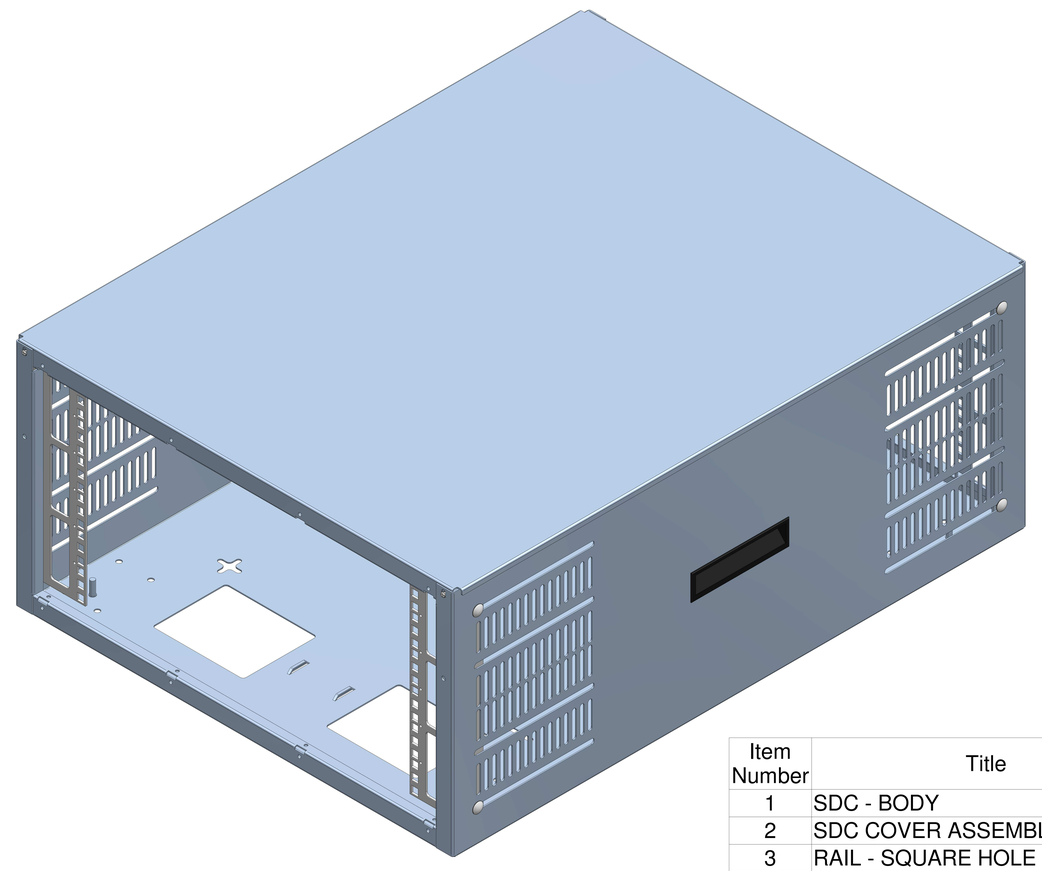

ISOMETRIC

Item Number	Title	Quantity
1	SDC - BODY	1
2	SDC COVER ASSEMBLY	1
3	RAIL - SQUARE HOLE	4

PART NUMBERS

SDC246U31BK	PAINTED BLACK TEXTURED

NOTES

Assembly Hardware Included
Mounting Hardware Not Included
See Hammond Website for More Accessories

Français

Pour tous les détails sur nos produits,
svp veuillez consulter notre site www.hammondmfg.com

Data subject to change without notice. Isometric drawing not to scale.
Les données sont sujettes à changement sans préavis.

HAMMOND MANUFACTURING®
www.hammondmfg.com

RoHS

PART NO. **SDC246U31BK**