ATA5723C/ATA5724C/ATA5728C

UHF ASK/FSK Receiver

DATASHEET

Features

- Frequency receiving range of (3 versions)
  - f_0 = 312.5MHz to 317.5MHz or
  - f_0 = 431.5MHz to 436.5MHz or
  - f_0 = 868MHz to 870MHz
- 30dB image rejection
- Receiving bandwidth
  - B_{IF} = 300kHz for 315MHz/433MHz version
  - B_{IF} = 600kHz for 868MHz version
- Fully integrated LC-VCO and PLL loop filter
- Very high sensitivity with power matched LNA
  - Atmel® ATA5723C/ATA5724C:
    - –107dBm, FSK, BR_0 (1.0Kbit/s to 1.8Kbit/s), Manchester, BER 10E-3
    - –113dBm, ASK, BR_0 (1.0Kbit/s to 1.8Kbit/s), Manchester, BER 10E-3
  - Atmel ATA5728C:
    - –105dBm, FSK, BR_0 (1.0Kbit/s to 1.8Kbit/s), Manchester, BER 10E-3
    - –111dBm, ASK, BR_0 (1.0Kbit/s to 1.8Kbit/s), Manchester, BER 10E-3
- High system IIP3
  - –18dBm at 868MHz
  - –23dBm at 433MHz
  - –24dBm at 315MHz
- System 1-dB compression point
  - –27.7dBm at 868MHz
  - –32.7dBm at 433MHz
  - –33.7dBm at 315MHz
- High large-signal capability at GSM band (blocking –33dBm at +10MHz, IIP3 = –24dBm at +20MHz)
- Logarithmic RSSI output
- XTO start-up with negative resistor of 1.5kΩ
- 5V to 20V automotive compatible data interface
- Data clock available for Manchester and bi-phase-coded signals
- Programmable digital noise suppression

- Low power consumption due to configurable polling
- Temperature range –40°C to +105°C
- ESD protection 2kV HBM, all pins
- Communication to microcontroller possible using a single bi-directional data line
- Low-cost solution due to high integration level with minimum external circuitry requirements
- Supply voltage range 4.5V to 5.5V

Benefits

- Low BOM list due to high integration
- Use of low-cost 13MHz crystal
- Lowest average current consumption for application due to self polling feature
- Reuse of Atmel® ATA5743 software
- World-wide coverage with one PCB due to 3 versions are pin compatible

1. Description

The Atmel® ATA5723C/ATA5724C/ATA5728C is a multi-chip PLL receiver device supplied in an TSSOP20 package. It has been specially developed for the demands of RF low-cost data transmission systems with data rates from 1Kbit/s to 10kBbit/s in Manchester or bi-phase code. Its main applications are in the areas of keyless entry systems, tire pressure monitoring systems, telemetering, and security technology systems. It can be used in the frequency receiving range of f_0 = 312.5MHz to 317.5MHz, f_0 = 431.5MHz to 436.5MHz or f_0 = 868MHz to 870MHz for ASK or FSK data transmission. All the statements made below refer to 315MHz, 433MHz and 868.3MHz applications.

Figure 1-1. System Block Diagram

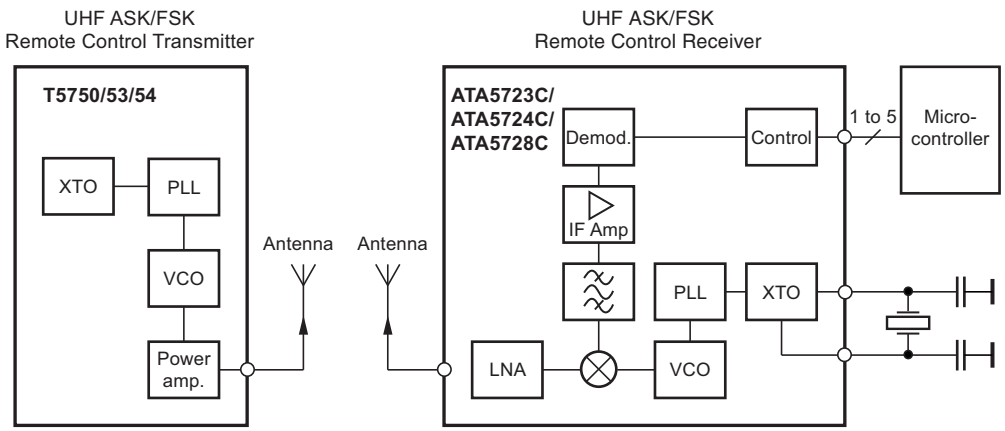

Figure 1-2. Block Diagram

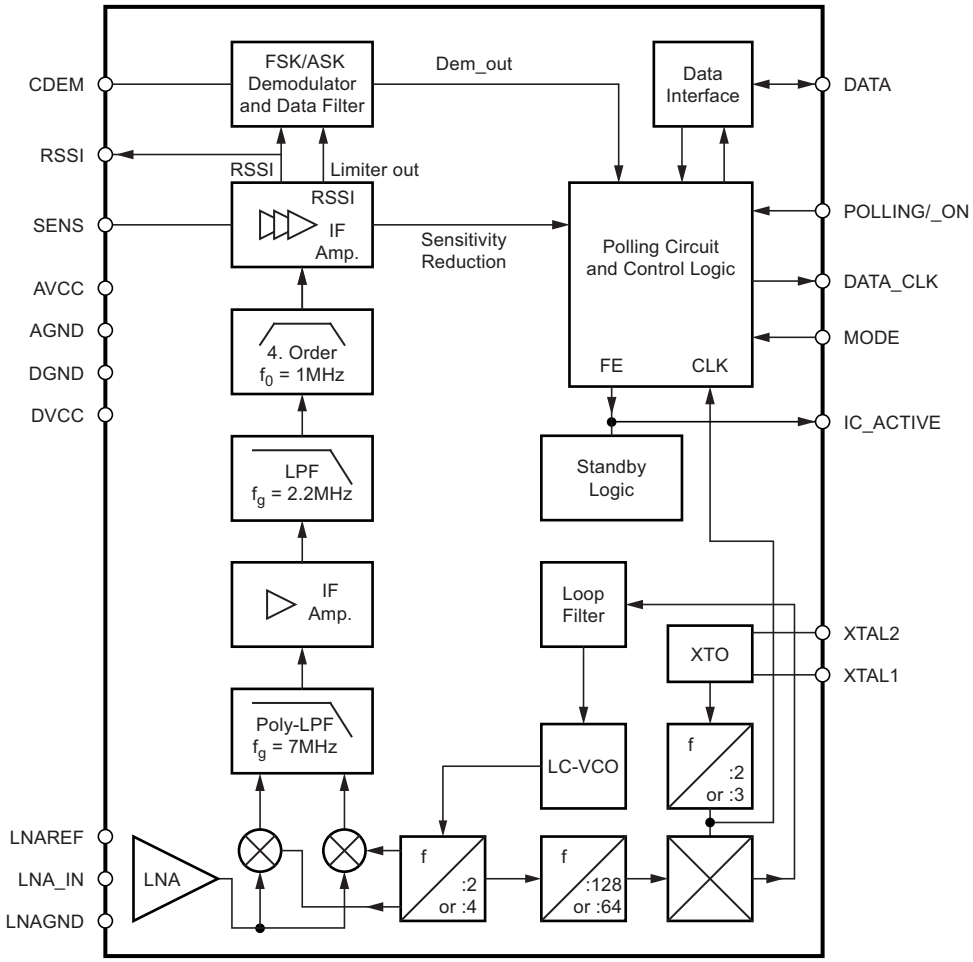

2. Pin Configuration

Figure 2-1. Pinning TSSOP20

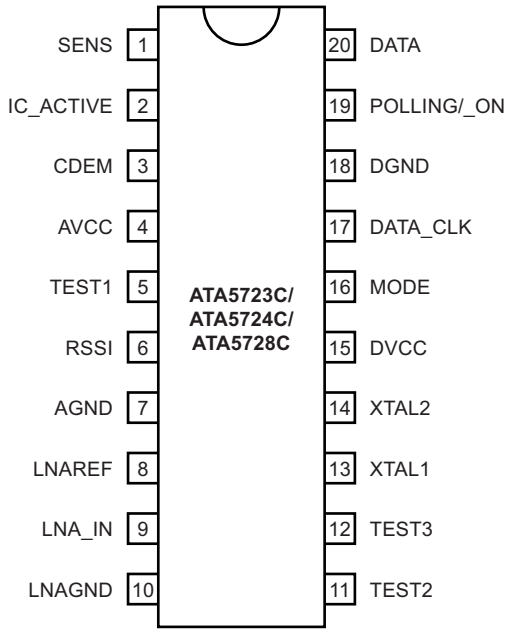

Table 2-1. Pin Description

Pin	Symbol	Function
1	SENS	Sensitivity-control resistor
2	IC_ACTIVE	IC condition indicator: Low = sleep mode, High = active mode
3	CDEM	Lower cut-off frequency data filter
4	AVCC	Analog power supply
5	TEST 1	Test pin, during operation at GND
6	RSSI	RSSI output
7	AGND	Analog ground
8	LNAREF	High-frequency reference node LNA and mixer
9	LNA_IN	RF input
10	LNAGND	DC ground LNA and mixer
11	TEST 2	Do not connect during operating
12	TEST 3	Test pin, during operation at GND
13	XTAL1	Crystal oscillator XTAL connection 1
14	XTAL2	Crystal oscillator XTAL connection 2
15	DVCC	Digital power supply
16	MODE	Selecting 315MHz/other versions Low: 315MHz version (Atmel ATA5723C) High: 433MHz/868MHz versions (Atmel ATA5724C/ATA5728C)
17	DATA_CLK	Bit clock of data stream
18	DGND	Digital ground
19	POLLING/_ON	Selects polling or receiving mode; Low: receiving mode, High: polling mode
20	DATA	Data output/configuration input

3. RF Front-end

The RF front-end of the receiver is a low-IF heterodyne configuration that converts the input signal into about 1MHz IF signal with a typical image rejection of 30dB. According to Figure Figure 1-2 on page 3 the front-end consists of an LNA (low noise amplifier), LO (local oscillator), I/Q mixer, polyphase low-pass filter and an IF amplifier.

The PLL generates the drive frequency f_{LO} for the mixer using a fully integrated synthesizer with integrated low noise LC-VCO (voltage controlled oscillator) and PLL-loop filter. The XTO (crystal oscillator) generates the reference frequency $f_{REF} = f_{XTO}/2$ (868MHz and 433MHz versions) or $f_{REF} = f_{XTO}/3$ (315MHz version). The integrated LC-VCO generates two or four times the mixer drive frequency f_{VCO}. The I/Q signals for the mixer are generated with a divide by two or four circuit ($f_{LO} = f_{VCO}/2$ for 868MHz version, $f_{LO} = f_{VCO}/4$ for 433MHz and 315MHz versions). f_{VCO} is divided by a factor of 128 or 64 and feeds into a phase frequency detector and is compared with f_{REF}. The output of the phase frequency detector is fed into an integrated loop filter and thereby generates the control voltage for the VCO. If f_{LO} is determined, f_{XTO} can be calculated using the following formula:

$f_{REF} = f_{LO}/128$ for 868MHz band, $f_{REF} = f_{LO}/64$ for 433MHz bands, $f_{REF} = f_{LO}/64$ for 315MHz bands.

The XTO is a two-pin oscillator that operates at the series resonance of the quartz crystal with high current but low voltage signal, so that there is only a small voltage at the crystal oscillator frequency at pins XTAL1 and XTAL2. According to Figure 3-1, the crystal should be connected to GND with two capacitors C_{L1} and C_{L2} from XTAL1 and XTAL2 respectively. The value of these capacitors are recommended by the crystal supplier. Due to an inductive impedance at steady state oscillation and some PCB parasitics, a lower value of C_{L1} and C_{L2} is normally necessary.

The value of C_{Lx} should be optimized for the individual board layout to achieve the exact value of f_{XTO} and hence of f_{LO}. (The best way is to use a crystal with known load resonance frequency to find the right value for this capacitor.) When designing the system in terms of receiving bandwidth and local oscillator accuracy, the accuracy of the crystal and the XTO must be considered.

Figure 3-1. XTO Peripherals

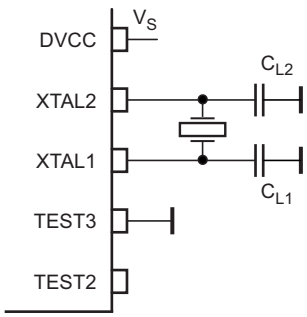

The nominal frequency f_{LO} is determined by the RF input frequency f_{RF} and the IF frequency f_{IF} using the following formula (low-side injection):

$f_{LO} = f_{RF} - f_{IF}$

To determine f_{LO}, the construction of the IF filter must be considered. The nominal IF frequency is f_{IF} = 950kHz. To achieve a good accuracy of the filter corner frequencies, the filter is tuned by the crystal frequency f_{XTO}. This means that there is a fixed relationship between f_{IF} and f_{LO}.

$f_{IF} = f_{LO}/318$ for the 315MHz band (Atmel® ATA5723C)
$f_{IF} = f_{LO}/438$ for the 433.92MHz band (Atmel ATA5724C)
$f_{IF} = f_{LO}/915$ for the 868.3MHz band (Atmel ATA5728C)

The relationship is designed to achieve the nominal IF frequency of:

f_{IF} = 987kHz for the 315MHz and B_{IF} = 300kHz (Atmel ATA5723C)
f_{IF} = 987kHz for the 433.92MHz and B_{IF} = 300kHz (Atmel ATA5724C)
f_{IF} = 947.8kHz for the 868.3MHz and B_{IF} = 600kHz (Atmel ATA5728C)

The RF input either from an antenna or from an RF generator must be transformed to the RF input pin LNA_IN. The input impedance of this pin is provided in the electrical parameters. The parasitic board inductances and capacitances influence the input matching. The RF receiver Atmel ATA5723C/ATA5724C/ATA5728C exhibits its highest sensitivity if the LNA is power matched. Because of this, matching to a SAW filter, a 50Ω or an antenna is easier. Figure 14-1 on page 29 shows a typical input matching network for f_{RF} = 315MHz, f_{RF} = 433.92MHz or f_{RF} = 868.3MHz to 50Ω. The input matching network shown in Table 14-2 on page 29 is the reference network for the parameters given in the electrical characteristics.

4. Analog Signal Processing

4.1 IF Filter

The signals coming from the RF front-end are filtered by the fully integrated 4th-order IF filter. The IF center frequency is:

f_{IF} = 987kHz for the 315MHz and B_{IF} = 300kHz (Atmel® ATA5723C)
f_{IF} = 987kHz for the 433.92MHz and B_{IF} = 300kHz (Atmel ATA5724C)
f_{IF} = 947.9kHz for the 868.3MHz and B_{IF} = 600kHz (Atmel ATA5728C)

The nominal bandwidth is 300kHz for Atmel ATA5723C and Atmel ATA5724C and 600kHz for Atmel ATA5728C.

4.2 Limiting RSSI Amplifier

The subsequent RSSI amplifier enhances the output signal of the IF amplifier before it is fed into the demodulator. The dynamic range of this amplifier is ΔR_{RSSI} = 60dB. If the RSSI amplifier is operated within its linear range, the best S/N ratio is maintained in ASK mode. If the dynamic range is exceeded by the transmitter signal, the S/N ratio is defined by the ratio of the maximum RSSI output voltage and the RSSI output voltage due to a disturber. The dynamic range of the RSSI amplifier is exceeded if the RF input signal is approximately 60dB higher compared to the RF input signal at full sensitivity.

The S/N ratio is not affected by the dynamic range of the RSSI amplifier in FSK mode because only the hard limited signal from a high-gain limiting amplifier is used by the demodulator.

The output voltage of the RSSI amplifier (VRSSI) is available at pin RSSI. Using the RSSI output signal, the signal strength of different transmitters can be distinguished. The usable input power range P_{Ref} is –100dBm to –55dBm.

Figure 4-1. RSSI Characteristics Atmel ATA5724C

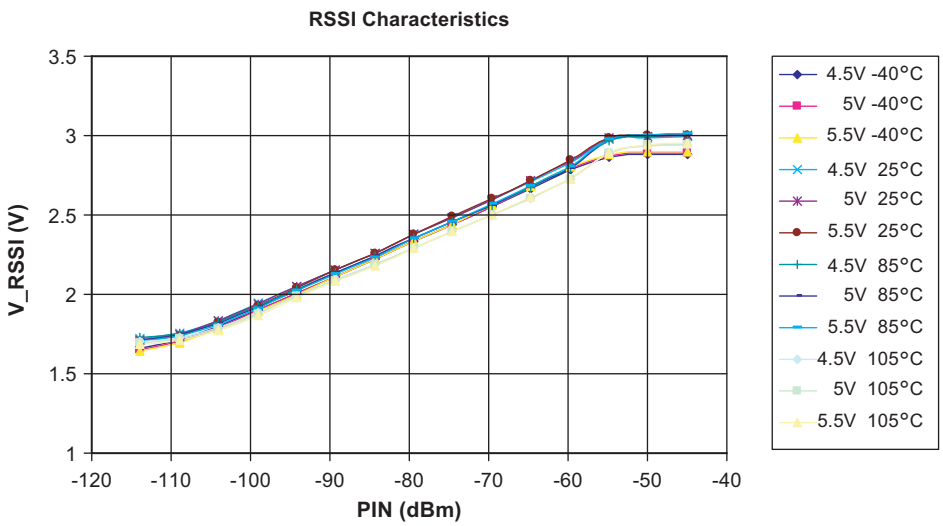

The output voltage of the RSSI amplifier is internally compared to a threshold voltage V_{Th_red}. V_{Th_red} is determined by the value of the external resistor R_{Sens}. R_{Sens} is connected between pin SENS and GND or V_S. The output of the comparator is fed into the digital control logic. By this means, it is possible to operate the receiver at a lower sensitivity.

If R_{Sens} is connected to GND, the receiver switches to full sensitivity. It is also possible to connect the pin SENS directly to GND to get the maximum sensitivity.

If R_{Sens} is connected to V_S, the receiver operates at a lower sensitivity. The reduced sensitivity is defined by the value of R_{Sens}, and the maximum sensitivity is defined by the signal-to-noise ratio of the LNA input. The reduced sensitivity depends on the signal strength at the output of the RSSI amplifier.

Since different RF input networks may exhibit slightly different values for the LNA gain, the sensitivity values given in the electrical characteristics refer to a specific input matching. This matching is described and illustrated in Section 14. “Data Interface” on page 29.

R_{Sens} can be connected to V_S or GND using a microcontroller. The receiver can be switched from full sensitivity to reduced sensitivity or vice versa at any time. In polling mode, the receiver does not wake up if the RF input signal does not exceed the selected sensitivity. If the receiver is already active, the data stream at pin DATA disappears when the input signal is lower than defined by the reduced sensitivity. Instead of the data stream, the pattern according to Figure 4-2 “Steady L State Limited DATA Output Pattern” is issued at pin DATA to indicate that the receiver is still active (see Figure 13-2 on page 27).

Figure 4-2. Steady L State Limited DATA Output Pattern

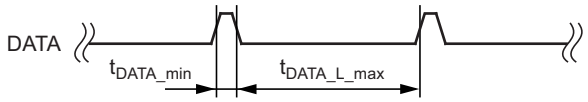

4.3 FSK/ASK Demodulator and Data Filter

The signal coming from the RSSI amplifier is converted into the raw data signal by the ASK/FSK demodulator. The operating mode of the demodulator is set using the bit ASK/_FSK in the OPMODE register. Logic L sets the demodulator to FSK, applying H to ASK mode.

In ASK mode an automatic threshold control circuit (ATC) is employed to set the detection reference voltage to a value where a good signal to noise ratio is achieved. This circuit also implements the effective suppression of any kind of in-band noise signals or competing transmitters. If the S/N (ratio to suppress in-band noise signals) exceeds about 10dB the data signal can be detected properly. However, better values are found for many modulation schemes of the competing transmitter.

The FSK demodulator is intended to be used for an FSK deviation of 10kHz ≤ Δf ≤ 100kHz. The data signal in FSK mode can be detected if the S/N (ratio to suppress in-band noise signals) exceeds about 2dB. This value is valid for all modulation schemes of a disturber signal.

The output signal of the demodulator is filtered by the data filter before it is fed into the digital signal processing circuit. The data filter improves the S/N ratio as its pass-band can be adopted to the characteristics of the data signal. The data filter consists of a 1st order high-pass and a 2nd order low-pass filter.

The high-pass filter cut-off frequency is defined by an external capacitor connected to pin CDEM. The cut-off frequency of the high-pass filter is defined by the following formula:

$$\mathrm{fcu_DF} = \frac{1}{2 \times \pi \times 30\ \mathrm{k\Omega} \times \mathrm{CDEM}}$$

In self-polling mode the data filter must settle very rapidly to achieve a low current consumption. Therefore, CDEM cannot be increased to very high values if self-polling is used. On the other hand, CDEM must be large enough to meet the data filter requirements according to the data signal. Recommended values for CDEM are given in the electrical characteristics.

The cut-off frequency of the low-pass filter is defined by the selected baud-rate range (BR_Range). The BR_Range is defined in the OPMODE register (refer to Section 11. “Configuring the Receiver” on page 22). The BR_Range must be set in accordance to the baud-rate used.

The Atmel® ATA5723C/ATA5724C/ATA5728C is designed to operate with data coding where the DC level of the data signal is 50%. This is valid for Manchester and Bi-phase coding. If other modulation schemes are used, the DC level should always remain within the range of V_{DC_min} = 33% and V_{DC_max} = 66%. The sensitivity may be reduced by up to 2dB in that condition.

Each BR_Range is also defined by a minimum and a maximum edge-to-edge time (t_{ee_sig}). These limits are defined in the electrical characteristics. They should not be exceeded to maintain full sensitivity of the receiver.

5. Receiving Characteristics

The Atmel® RF receiver ATA5723C/ATA5724C/ATA5728C can be operated with and without a SAW front-end filter. In a typical automotive application, a SAW filter is used to achieve better selectivity and large signal capability. The receiving frequency response without a SAW front-end filter is illustrated in Figure 5-1. This example relates to ASK mode. FSK mode exhibits a similar behavior. The plots are printed relatively to the maximum sensitivity. If a SAW filter is used, an insertion loss of about 3dB must be considered, but the overall selectivity is much better.

When designing the system in terms of receiving bandwidth, the LO deviation must be considered as it also determines the IF center frequency. The total LO deviation is calculated, to be the sum of the deviation of the crystal and the XTO deviation of the Atmel ATA5723C/ATA5724C/ATA5728C. Low-cost crystals are specified to be within ±90ppm over tolerance, temperature, and aging. The XTO deviation of the Atmel ATA5723C/ATA5724C/ATA5728C is an additional deviation due to the XTO circuit. This deviation is specified to be ±10ppm worst case for a crystal with CM = 7fF. If a crystal of ±90ppm is used, the total deviation is ±100ppm in that case. Note that the receiving bandwidth and the IF-filter bandwidth are equivalent in ASK mode but not in FSK mode.

Figure 5-1. Narrow Band Receiving Frequency Response Atmel ATA5724C

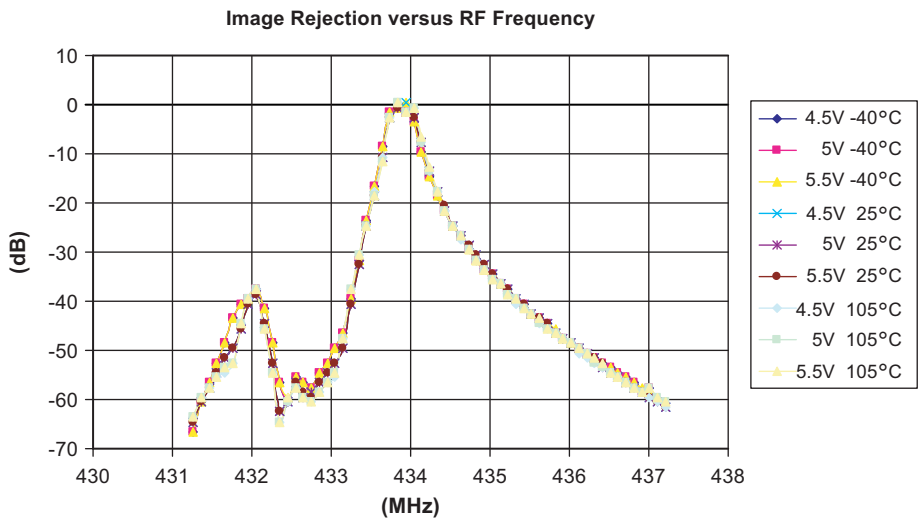

6. Polling Circuit and Control Logic

The receiver is designed to consume less than 1mA while being sensitive to signals from a corresponding transmitter. This is achieved using the polling circuit. This circuit enables the signal path periodically for a short time. During this time the bit-check logic verifies the presence of a valid transmitter signal. Only if a valid signal is detected, the receiver remains active and transfers the data to the connected microcontroller. If there is no valid signal present, the receiver is in sleep mode most of the time resulting in low current consumption. This condition is called polling mode. A connected microcontroller is disabled during that time.

All relevant parameters of the polling logic can be configured by the connected microcontroller. This flexibility enables the user to meet the specifications in terms of current consumption, system response time, data rate etc.

The receiver is very flexible with regards to the number of connection wires to the microcontroller. It can be either operated by a single bi-directional line to save ports to the connected microcontroller or it can be operated by up to five uni-directional ports.

7. Basic Clock Cycle of the Digital Circuitry

The complete timing of the digital circuitry and the analog filtering is derived from one clock. This clock cycle T_{Clk} is derived from the crystal oscillator (XTO) in combination with a divide by 28 or 30 circuit. According to Section 3. “RF Front-end” on page 5, the frequency of the crystal oscillator (f_{XTO}) is defined by the RF input signal (f_{RFin}) which also defines the operating frequency of the local oscillator (f_{LO}). The basic clock cycle for Atmel® ATA5724C and Atmel ATA5728C is T_{Clk} 28/f_{XTO} giving T_{Clk} = 2.066µs for f_{RF} = 868.3MHz and T_{Clk} = 2.069µs for f_{RF} = 433.92MHz. For Atmel ATA5723C the basic clock cycle is T_{Clk} = 30/f_{REF} giving T_{Clk} = 2.0382µs for f_{RF} = 315MHz.

T_{Clk} controls the following application-relevant parameters:

- Timing of the polling circuit including bit check
- Timing of the analog and digital signal processing
- Timing of the register programming
- Frequency of the reset marker
- IF filter center frequency (fIF0)

Most applications are dominated by three transmission frequencies: $f_{Transmit}$ = 315MHz is mainly used in USA, $f_{Transmit}$ = 868.3MHz and 433.92MHz in Europe. All timings are based on T_{Clk}. For the aforementioned frequencies, T_{Clk} is given as:

- Application 315MHz band (f_{XTO} = 14.71875MHz, f_{LO} = 314.13MHz, T_{Clk} = 2.0382µs)
- Application 868.3MHz band (f_{XTO} = 13.55234MHz, f_{LO} = 867.35MHz, T_{Clk} = 2.066µs)
- Application 433.92MHz band (f_{XTO} = 13.52875MHz, f_{LO} = 432.93MHz, T_{Clk} = 2.0696µs)

For calculation of T_{Clk} for applications using other frequency bands, see table in Section 18. “Electrical Characteristics Atmel ATA5724C, ATA5728C” on page 34.

The clock cycle of some function blocks depends on the selected baud-rate range (BR_Range), which is defined in the OPMODE register. This clock cycle T_{XClk} is defined by the following formulas:

BR_Range =	BR_Range0:	$T_{XClk} = 8 \times T_{Clk}$
	BR_Range1:	$T_{XClk} = 4 \times T_{Clk}$
	BR_Range2:	$T_{XClk} = 2 \times T_{Clk}$
	BR_Range3:	$T_{XClk} = 1 \times T_{Clk}$

8. Polling Mode

According to Figure 8-1 on page 11, the receiver stays in polling mode in a continuous cycle of three different modes. In sleep mode the signal processing circuitry is disabled for the time period T_{Sleep} while consuming low current of $I_S = I_{Soff}$. During the start-up period, $T_{Startup}$, all signal processing circuits are enabled and settled. In the following bit-check mode, the incoming data stream is analyzed bit-by-bit and compared with a valid transmitter signal. If no valid signal is present, the receiver is set back to sleep mode after the period $T_{Bit\text{-}check}$. This period varies according to each check as it is a statistical process. An average value for $T_{Bitcheck}$ is given in the electrical characteristics. During $T_{Startup}$ and $T_{Bit\text{-}check}$, the current consumption is $I_S = I_{Son}$. The condition of the receiver is indicated on pin IC_ACTIVE. The average current consumption in polling mode is dependent on the duty cycle of the active mode and can be calculated as:

$$I_{Spoll} = \frac{I_{Soff} \times T_{Sleep} + I_{Son} \times (T_{Startup} + T_{Bit\text{-}check})}{T_{Sleep} + T_{Startup} + T_{Bit\text{-}check}}$$

During T_{Sleep} and $T_{Startup}$, the receiver is not sensitive to a transmitter signal. To guarantee the reception of a transmitted command, the transmitter must start the telegram with an adequate preburst. The required length of the preburst depends on the polling parameters T_{Sleep}, $T_{Startup}$, $T_{Bit\text{-}check}$ and the start-up time of a connected microcontroller, $T_{Start_microcontroller}$. Thus, $T_{Bit\text{-}check}$ depends on the actual bit rate and the number of bits ($N_{Bit\text{-}check}$) to be tested.

The following formula indicates how to calculate the preburst length.

$$T_{Preburst} \geq T_{Sleep} + T_{Startup} + T_{Bit\text{-}check} + T_{Start_microcontroller}$$

8.1 Sleep Mode

The length of period T_{Sleep} is defined by the 5-bit word sleep of the OPMODE register, the extension factor X_{Sleep} (according to Table 11-8 on page 24), and the basic clock cycle T_{Clk}. It is calculated to be:

$$T_{Sleep} = \text{Sleep} \times X_{Sleep} \times 1024 \times T_{Clk}$$

The maximum value of T_{Sleep} is about 60ms if X_{Sleep} is set to 1. The time resolution is about 2ms in that case. The sleep time can be extended to almost half a second by setting X_{Sleep} to 8. X_{Sleep} can be set to 8 by bit $X_{SleepStd}$ to “1”.

Setting the configuration word sleep to its maximal value puts the receiver into a permanent sleep mode. The receiver remains in this state until another value for Sleep is programmed into the OPMODE register. This is particularly useful when several devices share a single data line. (It can also be used for microcontroller polling: using pin POLLING/_ON, the receiver can be switched on and off.)

Figure 8-1. Polling Mode Flow Chart

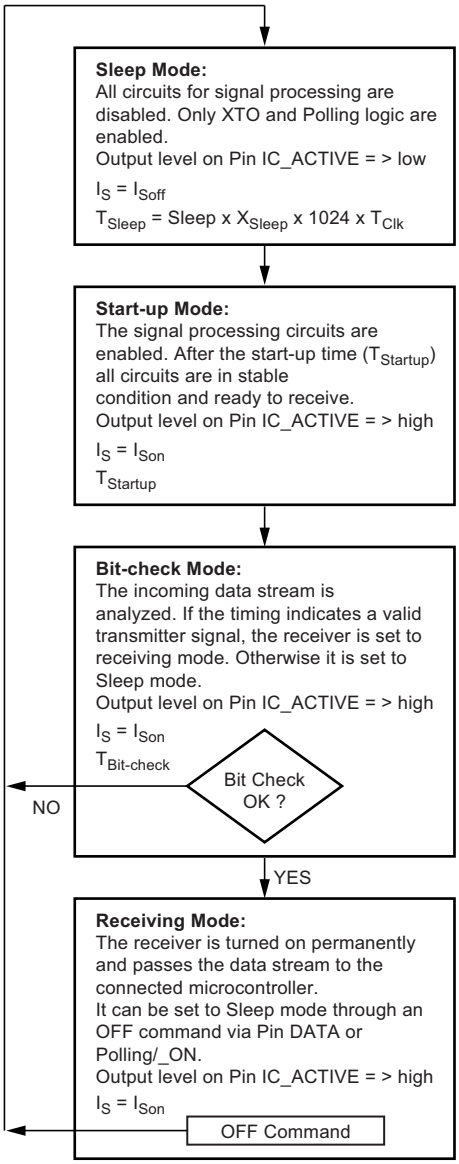

Sleep: 5-bit word defined by Sleep 0 to Sleep 4 in OPMODE register

X_{Sleep}: Extension factor defined by XSleepStd according to Table 11-8

T_{Clk}: Basic clock cycle defined by f_{XTO} and Pin MODE

$T_{Startup}$: Is defined by the selected baud rate range and TClk. The baud-rate range is defined by Baud 0 and Baud 1 in the OPMODE register.

$T_{Bit\text{-}check}$: Depends on the result of the bit check

If the bit check is ok, $T_{Bit\text{-}check}$ depends on the number of bits to be checked ($N_{Bit\text{-}check}$) and on the data rate used.

If the bit check fails, the average time period for that check depends on the selected baud-rate range and on T_{Clk}. The baud-rate range is defined by Baud 0 and Baud 1 in the OPMODE register.

8.2 Bit-check Mode

In bit-check mode the incoming data stream is examined to distinguish between a valid signal from a corresponding transmitter and signals due to noise. This is done by subsequent time frame checks where the distances between 2 signal edges are continuously compared to a programmable time window. The maximum number of these edge-to-edge tests, before the receiver switches to receiving mode, is also programmable.

8.3 Configuring the Bit Check

Assuming a modulation scheme that contains two edges per bit, two time frame checks verify one bit. This is valid for Manchester, bi-phase, and most other modulation schemes. The maximum count of bits to be checked can be set to 0, 3, 6, or 9 bits using the variable $N_{Bit\text{-}check}$ in the OPMODE register. This implies 0, 6, 12, and 18 edge-to-edge checks respectively. If $N_{Bit\text{-}check}$ is set to a higher value, the receiver is less likely to switch to receiving mode due to noise. In the presence of a valid transmitter signal, the bit check takes less time if $N_{Bit\text{-}check}$ is set to a lower value. In polling mode, the bit-check time is not dependent on NBit-check. Figure 8-2 shows an example where three bits are tested successfully and the data signal is transferred to pin DATA.

Figure 8-2. Timing Diagram for Complete Successful Bit Check

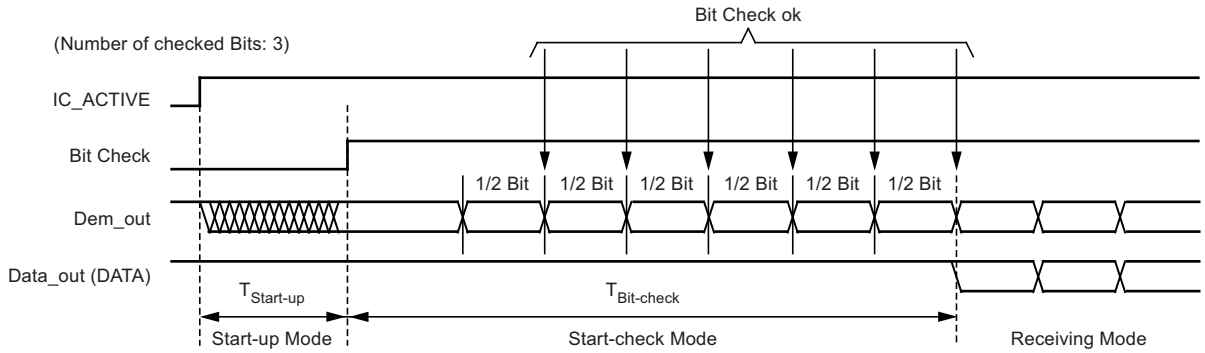

According to Figure 8-3, the time window for the bit check is defined by two separate time limits. If the edge-to-edge time t_{ee} is in between the lower bit-check limit T_{Lim_min} and the upper bit-check limit T_{Lim_max}, the check continues. If t_{ee} is smaller than T_{Lim_min} or t_{ee} exceeds T_{Lim_max}, the bit check is terminated and the receiver switches to sleep mode.

Figure 8-3. Valid Time Window for Bit Check

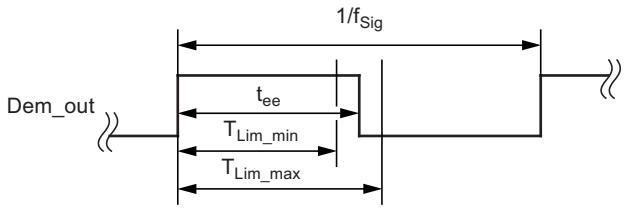

For best noise immunity using a low span between T_{Lim_min} and T_{Lim_max} is recommended. This is achieved using a fixed frequency at a 50% duty cycle for the transmitter preburst. A “11111...” or a “10101...” sequence in Manchester or bi-phase is suitable for this. A good compromise between receiver sensitivity and susceptibility to noise is a time window of ±30% regarding the expected edge-to-edge time t_{ee}. Using pre-burst patterns that contain various edge-to-edge time periods, the bit-check limits must be programmed according to the required span.

The bit-check limits are determined by means of the formula below.

$T_{Lim_min} = Lim_min \times T_{XClk}$
$T_{Lim_max} = (Lim_max - 1) \times T_{XClk}$

Lim_min and Lim_max are defined by a 5-bit word each within the LIMIT register.

Using above formulas, Lim_min and Lim_max can be determined according to the required T_{Lim_min}, T_{Lim_max} and T_{XClk}. The time resolution defining T_{Lim_min} and T_{Lim_max} is T_{XClk}. The minimum edge-to-edge time t_{ee} ($t_{DATA_L_min}$, $t_{DATA_H_min}$) is defined according to the Section 8.6 “Digital Signal Processing” on page 14. The lower limit should be set to Lim_min ≥ 10. The maximum value of the upper limit is Lim_max = 63.

If the calculated value for Lim_min is < 19, it is recommended to check 6 or 9 bits ($N_{Bit\text{-}check}$) to prevent switching to receiving mode due to noise.

Figure 8-4, Figure 8-5, and Figure 8-6 illustrate the bit check for the bit-check limits Lim_min = 14 and Lim_max = 24. When the IC is enabled, the signal processing circuits are enabled during $T_{Startup}$. The output of the ASK/FSK demodulator (Dem_out) is undefined during that period. When the bit check becomes active, the bit-check counter is clocked with the cycle T_{XClk}.

Figure 8-4 shows how the bit check proceeds if the bit-check counter value CV_Lim is within the limits defined by Lim_min and Lim_max at the occurrence of a signal edge. In Figure 8-5 the bit check fails as the value CV_Lim is lower than the limit Lim_min. The bit check also fails if CV_Lim reaches Lim_max. This is illustrated in Figure 8-6.

Figure 8-4. Timing Diagram During Bit Check

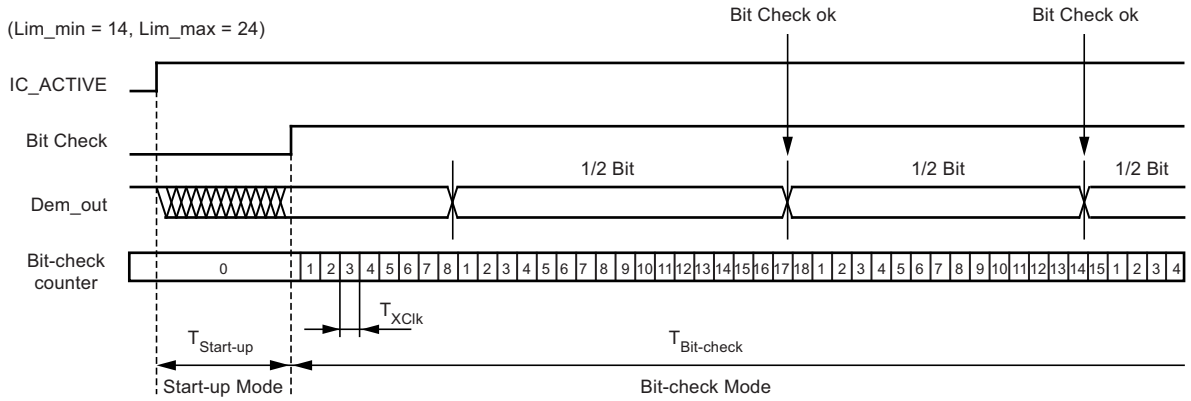

Figure 8-5. Timing Diagram for Failed Bit Check (Condition: CV_Lim < Lim_min)

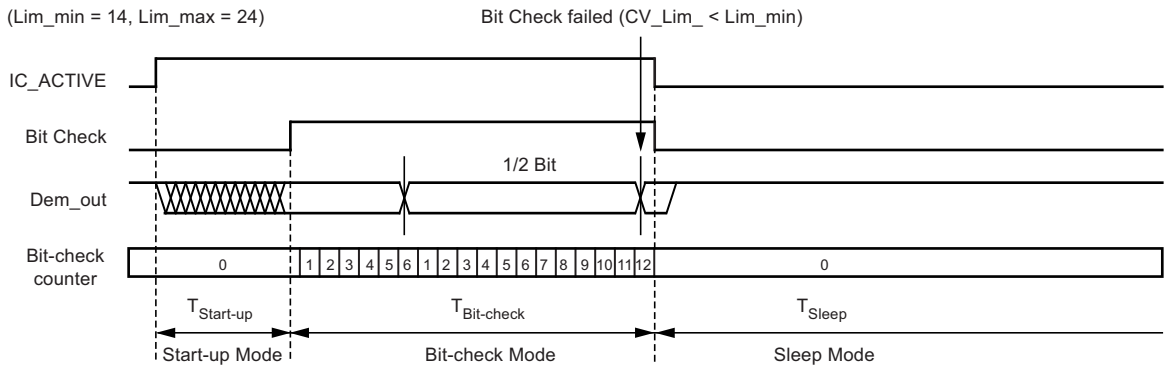

Figure 8-6. Timing Diagram for Failed Bit Check (Condition: CV_Lim ≥ Lim_max)

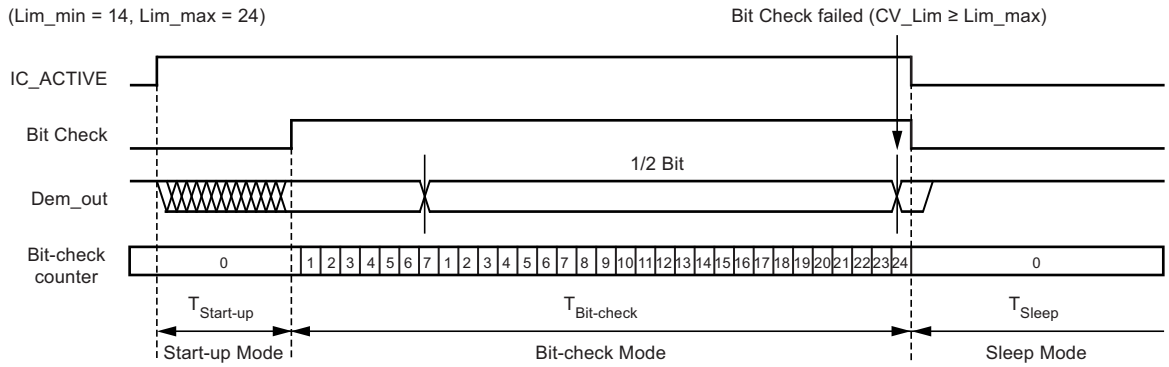

8.4 Duration of the Bit Check

If no transmitter signal is present during the bit check, the output of the ASK/FSK demodulator delivers random signals. The bit check is a statistical process and $T_{Bit\text{-}check}$ varies for each check. Therefore, an average value for $T_{Bit\text{-}check}$ is given in the electrical characteristics. $T_{Bit\text{-}check}$ depends on the selected baud-rate range and on T_{Clk}. A higher baud-rate range causes a lower value for $T_{Bit\text{-}check}$ resulting in a lower current consumption in polling mode.

In the presence of a valid transmitter signal, $T_{Bit\text{-}check}$ is dependent on the frequency of that signal, f_{Sig}, and the count of the checked bits, $N_{Bit\text{-}check}$. A higher value for $N_{Bit\text{-}check}$ thereby results in a longer period for $T_{Bit\text{-}check}$ requiring a higher value for the transmitter pre-burst $T_{Preburst}$.

8.5 Receiving Mode

If the bit check was successful for all bits specified by $N_{Bit\text{-}check}$, the receiver switches to receiving mode. According to Figure 8-2 on page 12, the internal data signal is switched to pin DATA in that case, and the data clock is available after the start bit has been detected (see Figure 9-1 on page 17). A connected microcontroller can be woken up by the negative edge at pin DATA or by the data clock at pin DATA_CLK. The receiver stays in that condition until it is switched back to polling mode explicitly.

8.6 Digital Signal Processing

The data from the ASK/FSK demodulator (Dem_out) is digitally processed in different ways and as a result converted into the output signal data. This processing depends on the selected baud-rate range (BR_Range). Figure 8-7 illustrates how Dem_out is synchronized by the extended clock cycle T_{XClk}. This clock is also used for the bit-check counter. Data can change its state only after T_{XClk} has elapsed. The edge-to-edge time period t_{ee} of the Data signal as a result is always an integral multiple of T_{XClk}.

The minimum time period between two edges of the data signal is limited to $t_{ee} \geq T_{DATA_min}$. This implies an efficient suppression of spikes at the DATA output. At the same time it limits the maximum frequency of edges at DATA. This eases the interrupt handling of a connected microcontroller.

The maximum time period for DATA to stay low is limited to $T_{DATA_L_max}$. This function is employed to ensure a finite response time in programming or switching off the receiver via pin DATA. $T_{DATA_L_max}$ is therefore longer than the maximum time period indicated by the transmitter data stream. Figure 8-9 on page 15 gives an example where Dem_out remains Low after the receiver has switched to receiving mode.

Figure 8-7. Synchronization of the Demodulator Output

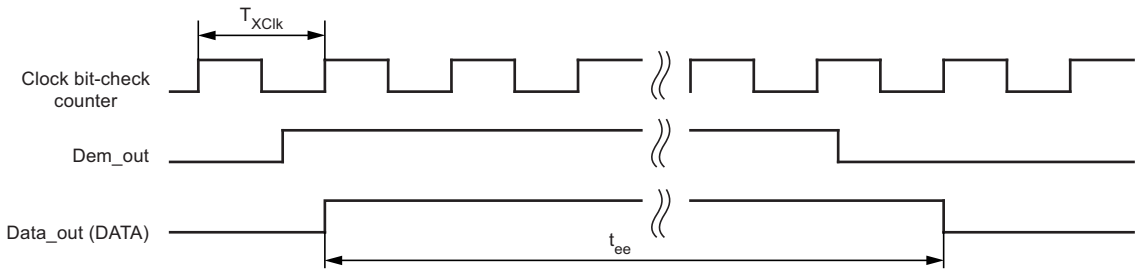

Figure 8-8. Debouncing of the Demodulator Output

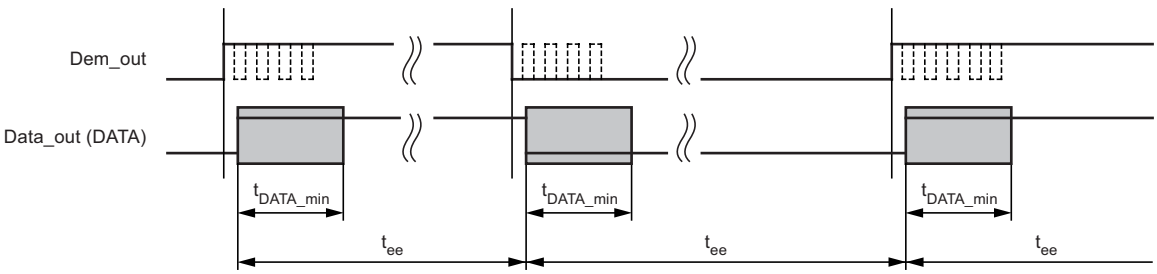

Figure 8-9. Steady L State Limited DATA Output Pattern after Transmission

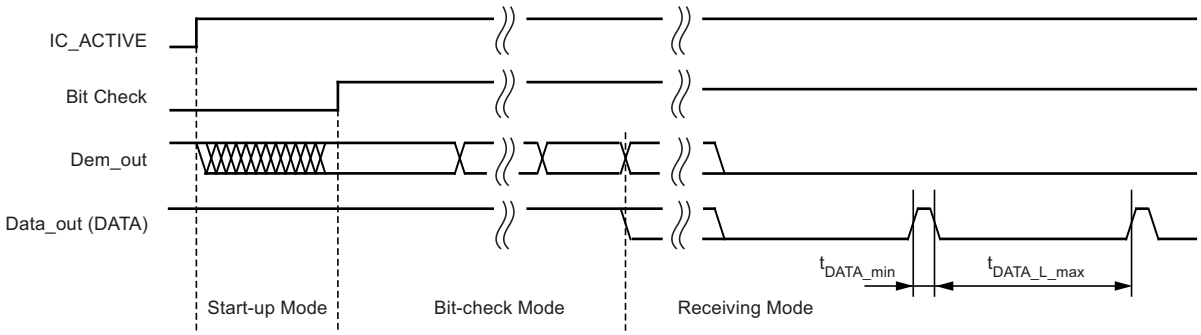

After the end of a data transmission, the receiver remains active. Depending of the bit Noise_Disable in the OPMODE register, the output signal at pin DATA is high or random noise pulses appear at pin DATA (see Section 10. “Digital Noise Suppression” on page 20). The edge-to-edge time period t_{ee} of the majority of these noise pulses is equal or slightly higher than T_{DATA_min}.

8.7 Switching the Receiver Back to Sleep Mode

The receiver can be set back to polling mode via pin DATA or via pin POLLING/_ON.

When using pin DATA, this pin must be pulled to low by the connected microcontroller for the period t1. Figure 8-10 on page 15 illustrates the timing of the OFF command (see Figure 13-2 on page 27). The minimum value of t1 depends on the BR_Range. The maximum value for t1 is not limited; however, exceeding the specified value to prevent erasing the reset marker is not recommended. Note also that an internal reset for the OPMODE and the LIMIT register is generated if t1 exceeds the specified values. This item is explained in more detail in the Section 11. “Configuring the Receiver” on page 22. Setting the receiver to sleep mode via DATA is achieved by programming bit 1 to “1” during the register configuration. Only one sync pulse (t3) is issued.

The duration of the OFF command is determined by the sum of t1, t2, and t10. The sleep time T_{Sleep} elapses after the OFF command. Note that the capacitive load at pin DATA is limited (see Section 14. “Data Interface” on page 29).

Figure 8-10. Timing Diagram of the OFF Command using Pin DATA

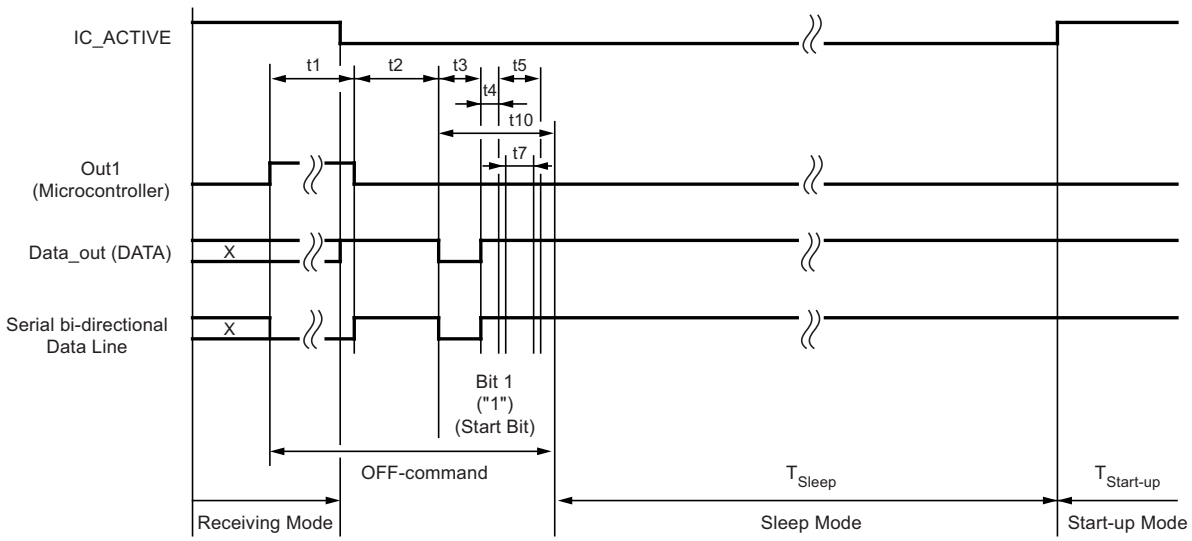

Figure 8-11. Timing Diagram of the OFF Command using Pin POLLING/_ON

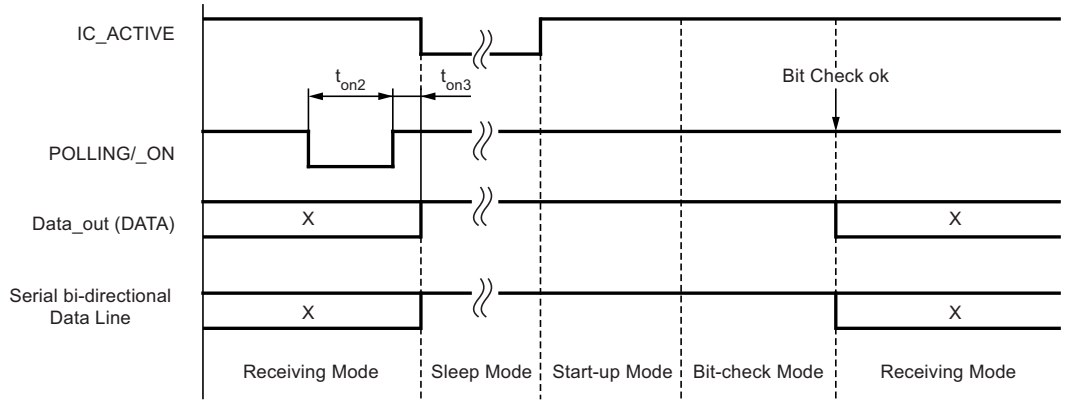

Figure 8-12. Activating the Receiving Mode using Pin POLLING/_ON

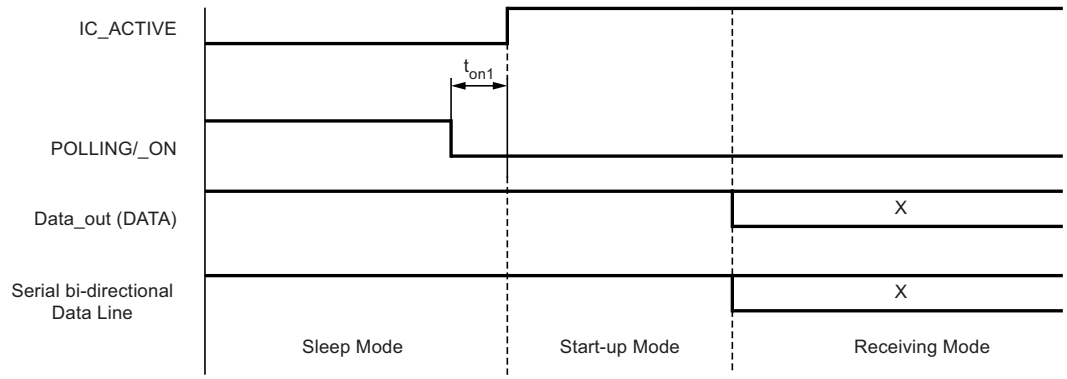

Figure 8-11 illustrates how to set the receiver back to polling mode using pin POLLING/_ON. The pin POLLING/_ON must be held to low for the time period t_{on2}. After the positive edge on pin POLLING/_ON and the delay t_{on3}, the polling mode is active and the sleep time T_{Sleep} elapses.

Using the POLLING/_ON command is faster than using pin DATA; however, this requires the use of an additional connection to the microcontroller.

Figure 8-12 illustrates how to set the receiver to receiving mode using the pin POLLING/_ON. The pin POLLING/_ON must be held to low. After the delay t_{on1}, the receiver changes from sleep mode to start-up mode regardless of the programmed values for T_{Sleep} and $N_{Bit\text{-}check}$. As long as POLLING/_ON is held to low, the values for T_{Sleep} and $N_{Bit\text{-}check}$ is ignored, but not deleted (see Section 10. “Digital Noise Suppression” on page 20).

If the receiver is polled exclusively by a microcontroller, T_{Sleep} must be programmed to 31 (permanent sleep mode). In this case the receiver remains in sleep mode as long as POLLING/_ON is held to high.

9. Data Clock

The pin DATA_CLK makes a data shift clock available to sample the data stream into a shift register. Using this data clock, a microcontroller can easily synchronize the data stream. This clock can only be used for Manchester and bi-phase coded signals.

9.1 Generation of the Data Clock

After a successful bit check, the receiver switches from polling mode to receiving mode and the data stream is available at pin DATA. In receiving mode, the data clock control logic (Manchester/bi-phase demodulator) is active and examines the incoming data stream. This is done, as with the bit check, by subsequent time frame checks where the distance between two edges is continuously compared to a programmable time window. As illustrated in Figure 9-1 on page 17, only two distances between two edges in Manchester and bi-phase coded signals are valid (T and 2T).

The limits for T are the same as used with the bit check. They can be programmed in the LIMIT-register (Lim_min and Lim_max, see Table 11-10 on page 25 and Table 11-11 on page 25).

The limits for 2T are calculated as follows:

Lower limit of 2T: Lim_min_2T = (Lim_min + Lim_max) – (Lim_max – Lim_min)/2

Upper limit of 2T: Lim_max_2T= (Lim_min + Lim_max) + (Lim_max – Lim_min)/2

(If the result for ‘Lim_min_2T’ or ‘Lim_max_2T’ is not an integer value, it is rounded up.)

The data clock is available, after the data clock control logic has detected the distance 2T (Start bit) and is issued with the delay t_{Delay} after the edge on pin DATA (see Figure 9-1 on page 17).

If the data clock control logic detects a timing or logical error (Manchester code violation), as illustrated in Figure 9-2 on page 18 and Figure 9-3 on page 18, it stops the output of the data clock. The receiver remains in receiving mode and starts with the bit check. If the bit check was successful and the start bit has been detected, the data clock control logic starts again with the generation of the data clock (see Figure 9-4 on page 18).

Use the function of the data clock only in conjunction with the bit check 3, 6 or 9 is recommended. If the bit check is set to 0 or the receiver is set to receiving mode using the pin POLLING/_ON, the data clock is available if the data clock control logic has detected the distance 2T (Start bit).

Note that for bi-phase-coded signals, the data clock is issued at the end of the bit.

Figure 9-1. Timing Diagram of the Data Clock

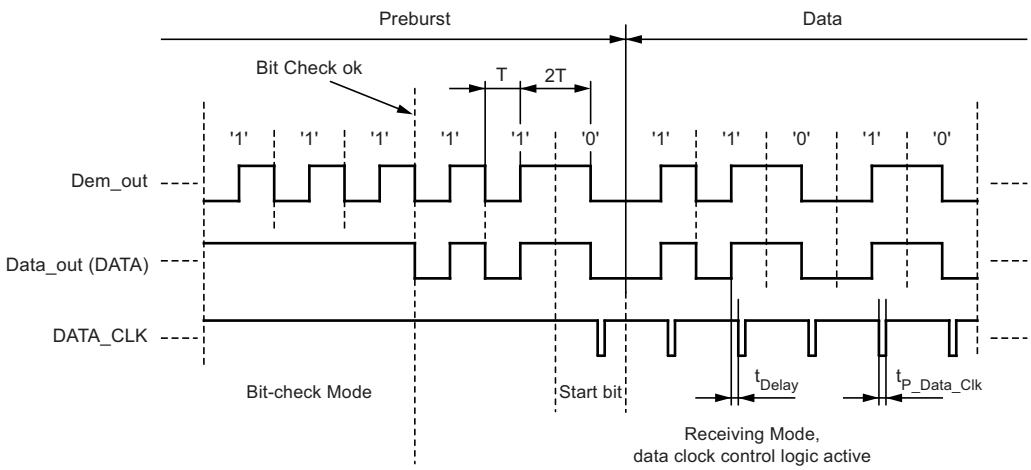

Figure 9-2. Data Clock Disappears Because of a Timing Error

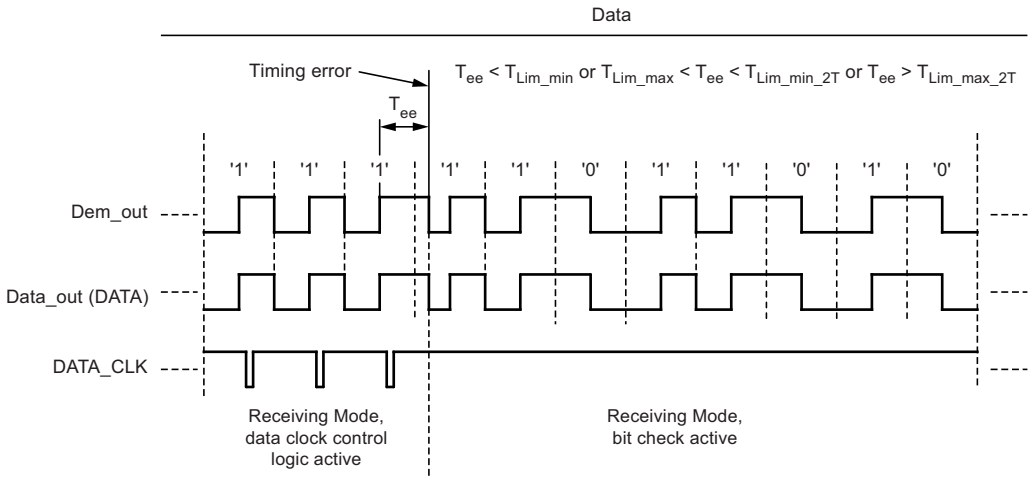

Figure 9-3. Data Clock Disappears Because of a Logical Error

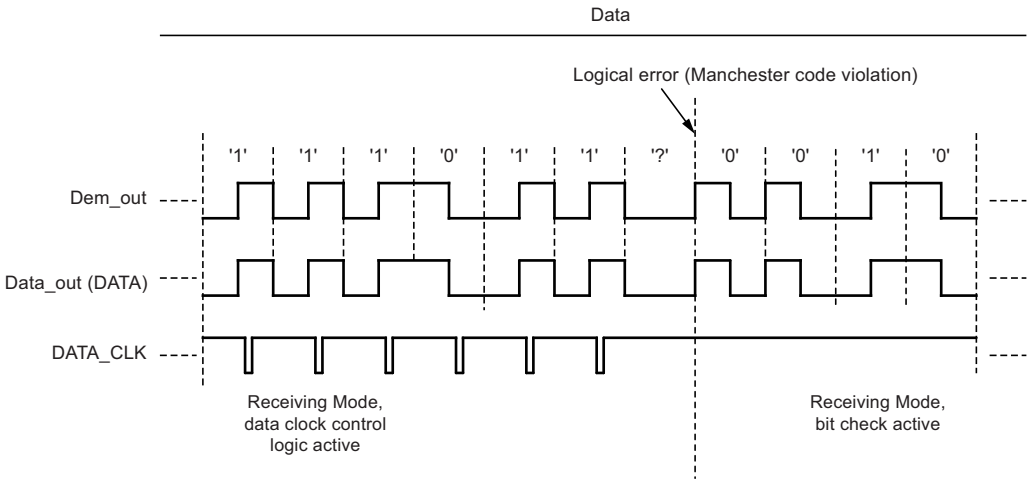

Figure 9-4. Output of the Data Clock After a Successful Bit Check

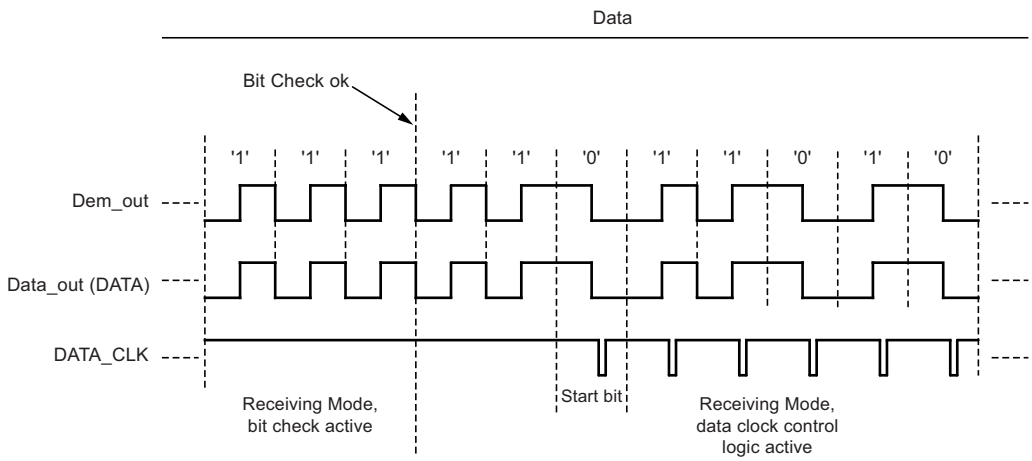

The delay of the data clock is calculated as follows: $t_{Delay} = t_{Delay1} + t_{Delay2}$

t_{Delay1} is the delay between the internal signals Data_Out and Data_In. For the rising edge, t_{Delay1} depends on the capacitive load C_L at pin DATA and the external pull-up resistor R_{pup}. For the falling edge, t_{Delay1} depends additionally on the external voltage V_X (see Figure 9-5, Figure 9-6 and Figure 13-2 on page 27). When the level of Data_In is equal to the level of Data_Out, the data clock is issued after an additional delay t_{Delay2}.

Note that the capacitive load at pin DATA is limited. If the maximum tolerated capacitive load at pin DATA is exceeded, the data clock disappears (see Section 14. “Data Interface” on page 29).

Figure 9-5. Timing Characteristic of the Data Clock (Rising Edge on Pin DATA)

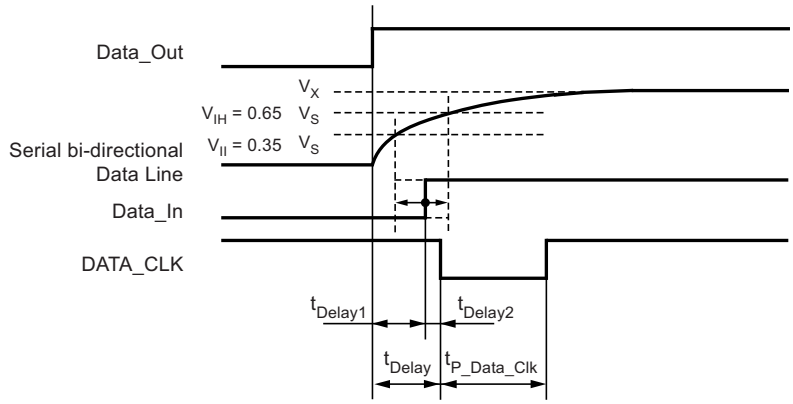

Figure 9-6. Timing Characteristic of the Data Clock (Falling Edge of the Pin DATA)

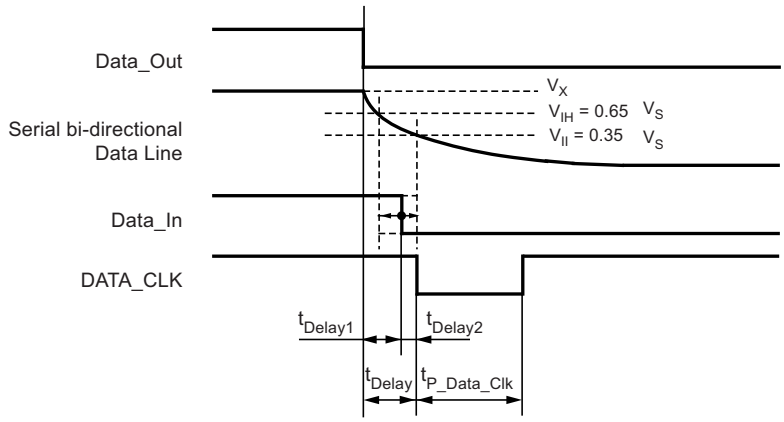

10. Digital Noise Suppression

After a data transmission, digital noise appears on the data output (see Figure 10-1). To prevent digital noise keeping the connected microcontroller busy, it can be suppressed in two different ways:

- Automatic noise suppression
- Controlled noise suppression by the microcontroller

10.1 Automatic Noise Suppression

The receiver changes to bit-check mode at the end of a valid data stream if the bit Noise_Disable (Table 11-9 on page 24) in the OPMODE register is set to 1 (default). The digital noise is suppressed, and the level at pin DATA is high. The receiver changes back to receiving mode, if the bit check was successful.

This method of noise suppression is recommended if the data stream is Manchester or bi-phase coded and is active after power on.

Figure 10-3 illustrates the behavior of the data output at the end of a data stream. If the last period of the data stream is a high period (rising edge to falling edge), a pulse occurs on pin DATA. The length of the pulse depends on the selected baud-rate range.

Figure 10-1. Output of Digital Noise at the End of the Data Stream

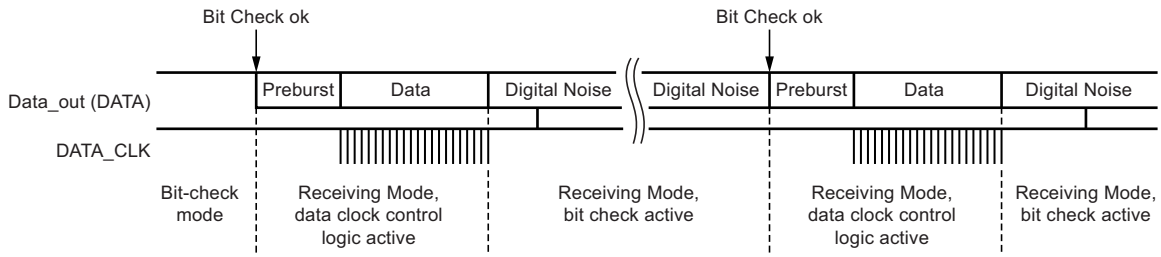

Figure 10-2. Automatic Noise Suppression

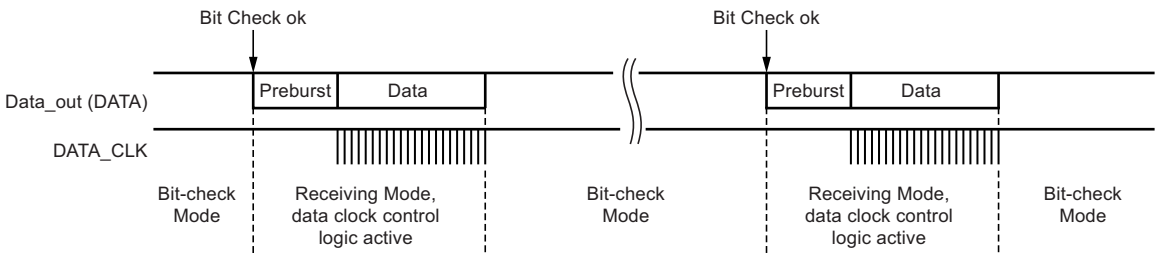

Figure 10-3. Occurrence of a Pulse at the End of the Data Stream

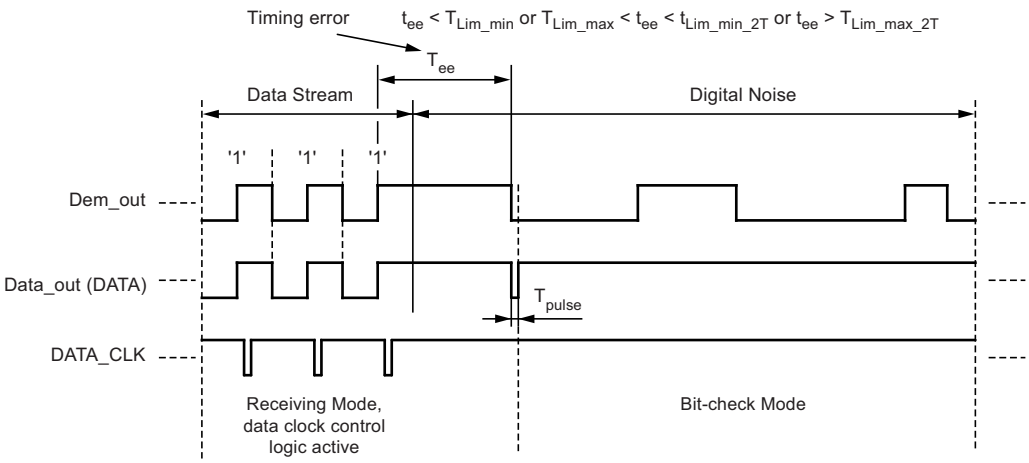

10.2 Controlled Noise Suppression by the Microcontroller

Digital noise appears at the end of a valid data stream if the bit Noise_Disable (see Table 11-9 on page 24) in the OPMODE register is set to 0. To suppress the noise, the pin POLLING/_ON must be set to low. The receiver remains in receiving mode. The OFF command then causes a change to start-up mode. The programmed sleep time (see Table 11-7 on page 24) is not executed because the level at pin POLLING/_ON is low; however, the bit check is active in this case. The OFF command also activates the bit check if the pin POLLING/_ON is held to low. The receiver changes back to receiving mode if the bit check was successful. To activate the polling mode at the end of the data transmission, the pin POLLING/_ON must be set to high. This way of suppressing the noise is recommended if the data stream is not Manchester or bi-phase coded.

Figure 10-4. Controlled Noise Suppression

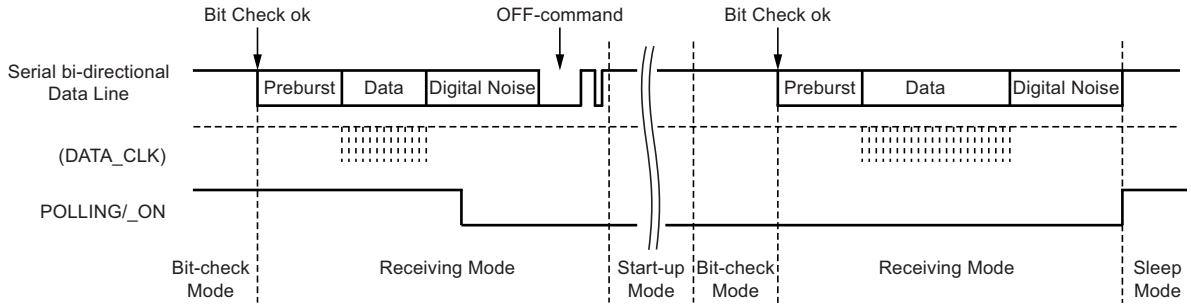

11. Configuring the Receiver

The Atmel® ATA5723C/ATA5724C/ATA5728C receiver is configured using two 12-bit RAM registers called OPMODE and LIMIT. The registers can be programmed by means of the bidirectional DATA port. If the register content has changed due to a voltage drop, this condition is indicated by a the output pattern called reset marker (RM). If this occurs, the receiver must be reprogrammed. After a power-on reset (POR), the registers are set to default mode. If the receiver is operated in default mode, there is no need to program the registers. Table 11-3 on page 22 shows the structure of the registers. According to Table 11-1, bit 1 defines whether the receiver is set back to polling mode using the OFF command (see "Receiving Mode" on page 14) or whether it is programmed. Bit 2 represents the register address. It selects the appropriate register to be programmed. For high programming reliability, bit 15 (Stop bit), at the end of the programming operation, must be set to 0.

Table 11-1. Effect of Bit 1 and Bit 2 on Programming the Registers

Bit 1	Bit 2	Action
1	x	The receiver is set back to polling mode (OFF command)
0	1	The OPMODE register is programmed
0	0	The LIMIT register is programmed

Table 11-2. Effect of Bit 15 on Programming the Register

Bit 15	Action
0	The values are written into the register (OPMODE or LIMIT)
1	The values are not written into the register

Table 11-3. Effect of the Configuration Words within the Registers

Bit 1	Bit 2	Bit 3	Bit 4	Bit 5	Bit 6	Bit 7	Bit 8	Bit 9	Bit 10	Bit 11	Bit 12	Bit 13	Bit 14	Bit 15
OFF command														
1	–	–	–	–	–	–	–	–	–	–	–	–	–	–
–		OPMODE register												–
0	1	BR_Range		$N_{Bit\text{-}check}$		Modu-lation	Sleep					X_{Sleep}	Noise Suppression	0
		Baud1	Baud0	BitChk1	BitChk0	ASK/ _FSK	Sleep4	Sleep3	Sleep2	Sleep1	Sleep0	$X_{SleepStd}$	Noise_ Disable	
Default values of Bit 3...14		0	0	0	1	0	0	0	1	1	0	0	1	–
–		LIMIT register												–
0	0	Lim_min						Lim_max						–
		Lim_ min5	Lim_ min4	Lim_ min3	Lim_ min2	Lim_ min1	Lim_ min0	Lim_ max5	Lim_ max4	Lim_ max3	Lim_ max2	Lim_ max1	Lim_ max0	0
Default values of Bit 3...14		0	1	0	1	0	1	1	0	1	0	0	1	–

The following tables illustrate the effect of the individual configuration words. The default configuration is highlighted for each word.

BR_Range sets the appropriate baud-rate range and simultaneously defines XLim. XLim is used to define the bit-check limits T_{Lim_min} and T_{Lim_max} as shown in Table 11-10 on page 25 and Table 11-11 on page 25.

Table 11-4. Effect of the configuration word BR_Range

BR_Range		
Baud1	**Baud0**	**Baud-rate Range/Extension Factor for Bit-check Limits (XLim)**
0	0	BR_Range0 (BR_Range0 = 1.0Kbit/s to 1.8Kbit/s) XLim = 8 (default)
0	1	BR_Range1 (BR_Range1 = 1.8Kbit/s to 3.2Kbit/s) XLim = 4
1	0	BR_Range2 (BR_Range2 = 3.2Kbit/s to 5.6Kbit/s) XLim = 2
1	1	BR_Range3 (BR_Range3 = 5.6Kbit/s to 10Kbit/s) XLim = 1

Table 11-5. Effect of the Configuration word $N_{Bit\text{-}check}$

$N_{Bit\text{-}check}$		
BitChk1	**BitChk0**	**Number of Bits to be Checked**
0	0	0
0	1	3 (default)
1	0	6
1	1	9

Table 11-6. Effect of the Configuration Bit Modulation

Modulation	Selected Modulation
ASK/_FSK	–
0	FSK (default)
1	ASK

Table 11-7. Effect of the Configuration Word Sleep

Sleep					Start Value for Sleep Counter (T_{Sleep} = Sleep × X_{Sleep} × 1024 × T_{Clk})
Sleep4	Sleep3	Sleep2	Sleep1	Sleep0	
0	0	0	0	0	0 (Receiver polls continuously until a valid signal occurs)
0	0	0	0	1	If X_{Sleep} = 1 T_{Sleep} = 2.11ms for f_{RF} = 868.3MHz, T_{Sleep} = 2.12ms for f_{RF} = 433.92MHz T_{Sleep} = 2.08ms for f_{RF} = 315MHz
0	0	0	1	0	2
0	0	0	1	1	3
...	...	...	...	...	...
0	0	1	1	0	If X_{Sleep} = 1 T_{Sleep} = 12.69ms for f_{RF} = 868.3MHz, T_{Sleep} = 12.71ms for f_{RF} = 433.92MHz T_{Sleep} = 12.52ms for f_{RF} = 315MHz
...	...	...	...	...	...
1	1	1	0	1	29
1	1	1	1	0	30
1	1	1	1	1	31 (permanent sleep mode)

Table 11-8. Effect of the Configuration Bit XSleep

X_{Sleep}	Extension Factor for Sleep Time (T_{Sleep} = Sleep × X_{Sleep} × 1024 × T_{Clk})
$X_{SleepStd}$	
0	1 (default)
1	8

Table 11-9. Effect of the Configuration Bit Noise Suppression

Noise Suppression	
Noise_Disable	Suppression of the Digital Noise at Pin DATA
0	Noise suppression is inactive
1	Noise suppression is active (default)

Table 11-10. Effect of the Configuration Word Lim_min

Lim_min[1] (Lim_min < 10 is not Applicable)						Lower Limit Value for Bit Check
Lim_min5	Lim_min4	Lim_min3	Lim_min2	Lim_min1	Lim_min0	(T_{Lim_min} = Lim_min × XLim × T_{Clk})
0	0	1	0	1	0	10
0	0	1	0	1	1	11
0	0	1	1	0	0	12
..	..	..	..	..	..	
0	1	0	1	0	1	21 (default, BR_Range0) (T_{Lim_min} = 347µs for f_{RF} = 868.3MHz T_{Lim_min} = 347µs for f_{RF} = 433.92MHz T_{Lim_min} = 342µs for f_{RF} = 315MHz)
..	..	..	..	..	..	
1	1	1	1	0	1	61
1	1	1	1	1	0	62
1	1	1	1	1	1	63

Note: 1. Lim_min is also used to determine the margins of the data clock control logic (see Section 9. “Data Clock” on page 17).

Table 11-11. Effect of the Configuration Word Lim_max

Lim_max[1] (Lim_max < 12 is not applicable)						Upper Limit Value for Bit Check
Lim_max5	Lim_max4	Lim_max3	Lim_max2	Lim_max1	Lim_max0	(TLim_max = (Lim_max – 1) × XLim × T_{Clk})
0	0	1	1	0	0	12
0	0	1	1	0	1	13
0	0	1	1	1	0	14
..	..	..	..	..	..	
1	0	1	0	0	1	41 (default, BR_Range0) (T_{Lim_max} = 661µs for f_{RF} = 868.3MHz T_{Lim_max} = 662µs for f_{RF} = 433.92MHz T_{Lim_max} = 652µs for f_{RF} = 315MHz)
..	..	..	..	..	..	
1	1	1	1	0	1	61
1	1	1	1	1	0	62
1	1	1	1	1	1	63

Note: 1. Lim_max is also used to determine the margins of the data clock control logic (see Section 9. “Data Clock” on page 17).

12. Conservation of the Register Information

The Atmel® ATA5723C/ATA5724C uses an integrated power-on reset and brown-out detection circuitry as a mechanism to preserve the RAM register information.

According to Figure 12-1, a power-on reset (POR) is generated if the supply voltage V_S drops below the threshold voltage $V_{ThReset}$. The default parameters are programmed into the configuration registers in that condition. The POR is cancelled after the minimum reset period t_{Rst} when V_S exceeds $V_{ThReset}$. A POR is also generated when the supply voltage of the receiver is turned on.

To indicate that condition, the receiver displays a reset marker (RM) at pin DATA after a reset. The RM is represented by the fixed frequency f_{RM} at a 50% duty-cycle. RM can be cancelled using a low pulse t1 at pin DATA. The RM has the following characteristics:

- f_{RM} is lower than the lowest feasible frequency of a data signal. Due to this, RM cannot be misinterpreted by the connected microcontroller.
- If the receiver is set back to polling mode using pin DATA, RM cannot be cancelled accidentally if t1 is applied as described in the proposal in Section 13. “Programming the Configuration Register” on page 27.

Using this conservation mechanism, the receiver cannot lose its register information without communicating this condition using the reset marker RM.

Figure 12-1. Generation of the Power-on Reset

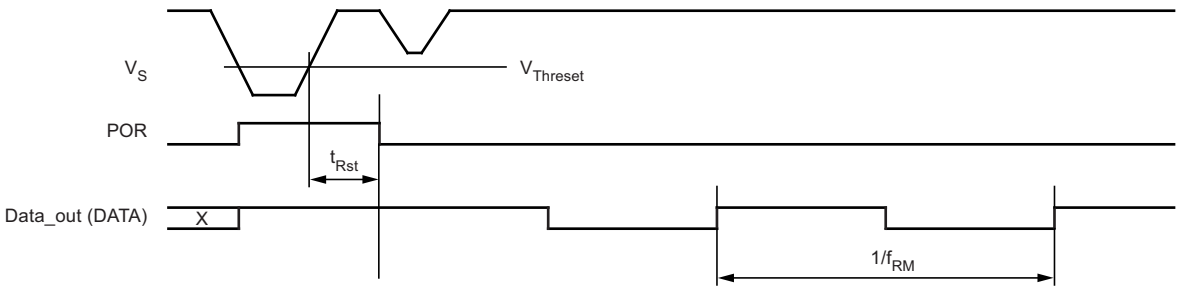

13. Programming the Configuration Register

Figure 13-1. Timing of the Register Programming

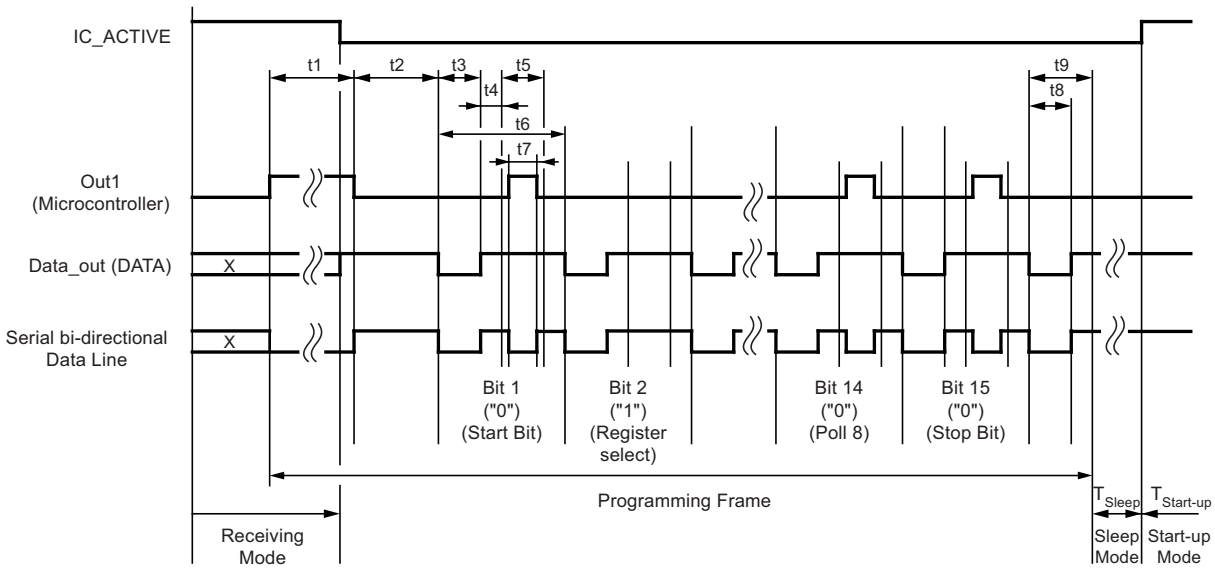

Figure 13-2. Data Interface

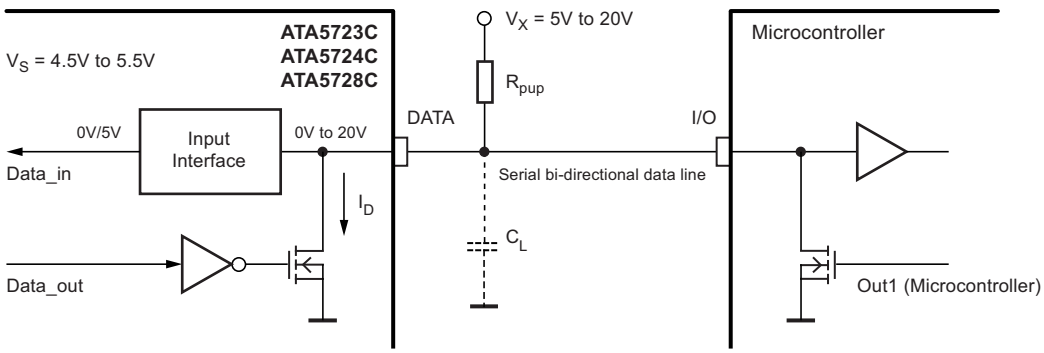

The configuration registers are serially programmed using the bi-directional data line as shown in Figure 13-1 and Figure 13-2.

To start programming, the serial data line DATA is pulled to low by the microcontroller for the time period t1. When DATA has been released, the receiver becomes the master device. When the programming delay period t2 has elapsed, the receiver emits 15 subsequent synchronization pulses with the pulse length t3. After each of these pulses, a programming window occurs. The delay until the program window starts is determined by t4, the duration is defined by t5. The individual bits are set within the programming window. If the microcontroller pulls down pin DATA for the time period t7 during t5, the corresponding bit is set to “0”. If no programming pulse t7 is issued, this bit is set to “1”. All 15 bits are programmed this way. The time frame to program a bit is defined by t6.

Bit 15 is followed by the equivalent time window t9. During this window, the equivalence acknowledge pulse t8 (E_Ack) occurs if the just programmed mode word is equivalent to the mode word that was already stored in that register. E_Ack should be used to verify that the mode word was correctly transferred to the register. The register must be programmed twice in that case.

A register can be programmed when the receiver is in both sleep-mode and active mode. During programming, the LNA, LO, low-pass filter, IF-amplifier, and the FSK/MSK demodulator are disabled. The t1 pulse is used to start the programming or to switch the receiver back to polling mode (OFF command). (The receiver is switched back to polling mode with the OFF command if bit 1 is set to “1”.) The following convention should be considered for the length of the programming start pulse t1:

Using a t1 value of t1 (min) < t1 < 5632 TClk (where t1 (min) is the minimum specified value for the relevant BR_Range) when the receiver is active i.e., not in reset mode initiates the programming or OFF command. However, if this t1 value is used when the receiver is in reset mode, programming or OFF command is NOT initiated and RM remains present at pin DATA. Note, the RM cannot be deleted when using this t1 value.

Using a t1 value of t1 > 7936 × TClk, programming or OFF command is initiated when the receiver is in both reset mode and active mode. The registers PMODE and LIMIT are set to the default values and the RM is deleted, if present. This t1 values can be used if the connected microcontroller detects an RM. Additionally, this t1 value can generally be used if the receiver operates in default mode.

Note that the capacitive load at pin DATA is limited.

14. Data Interface

The data interface (see Figure 13-2 on page 27) is designed for automotive requirements. It can be connected using the pull-up resistor R_{pup} up to 20V and is short-circuit-protected.

The applicable pull-up resistor R_{pup} depends on the load capacity C_L at pin DATA and the selected BR_range (see Table 14-1).

Table 14-1. Applicable R_{pup}

-	BR_range	Applicable R_{pup}
$C_L \leq 1nF$	B0	1.6kΩ to 47kΩ
	B1	1.6kΩ to 22kΩ
	B2	1.6kΩ to 12kΩ
	B3	1.6kΩ to 5.6kΩ
$C_L \leq 100pF$	B0	1.6kΩ to 470kΩ
	B1	1.6kΩ to 220kΩ
	B2	1.6kΩ to 120kΩ
	B3	1.6kΩ to 56kΩ

Figure 14-1. Application Circuit: f_{RF} = 315MHz(1), 433.92MHz or without SAW Filter

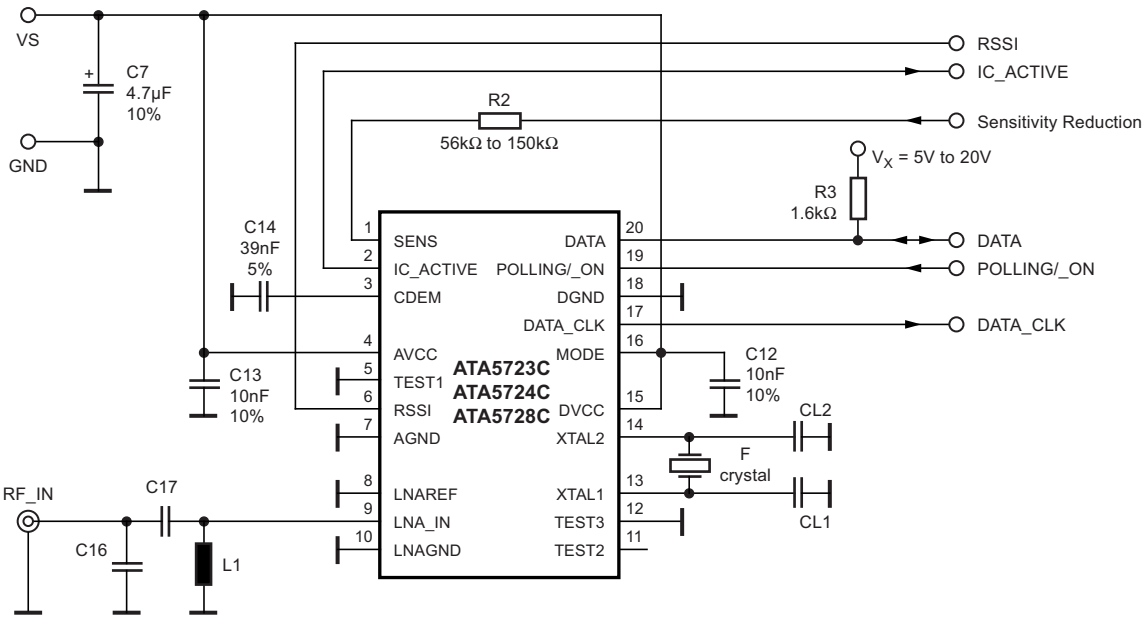

Note: For 315MHz application pin MODE must be connected to GND.

Table 14-2. **Input Matching to 50Ω**

RF Frequency (MHz)	LNA Matching			Crystal Frequency f_{XTAL} (MHz)
	C16 (pF)	C17 (pF)	L1 (nH)	
315	Not connected	3	39	14.71875
433.92	Not connected	3	20	13.52875
868.3	1	3	6.8	13.55234

15. Absolute Maximum Ratings

Stresses beyond those listed under “Absolute Maximum Ratings” may cause permanent damage to the device. This is a stress rating only and functional operation of the device at these or any other conditions beyond those indicated in the operational sections of this specification is not implied. Exposure to absolute maximum rating conditions for extended periods may affect device reliability.

Parameters	Symbol	Min.	Max.	Unit
Supply voltage	V_S		6	V
Power dissipation	P_{tot}		1000	mW
Junction temperature	T_j		150	°C
Storage temperature	T_{stg}	–55	+125	°C
Ambient temperature	T_{amb}	–40	+105	°C
Maximum input level, input matched to 50Ω	P_{in_max}		10	dBm

16. Thermal Resistance

Parameters	Symbol	Value	Unit
Junction ambient	R_{thJA}	100	K/W

17. Electrical Characteristics Atmel ATA5723C

All parameters refer to GND, T_{amb} = –40°C to +105°C, V_S = 4.5V to 5.5V, f_0 = 315MHz unless otherwise specified (For typical values: V_S = 5V, T_{amb} = 25°C).

No.	Parameter	Test Conditions	Symbol	f_{RF} = 315MHz 14.71875MHz Oscillator						Variable Oscillator			Unit	Type*
				Min.	Typ.	Max.	Min.	Typ.	Max.	Min.	Typ.	Max.		
1	Basic Clock Cycle of the Digital Circuitry													
1.1	Basic clock cycle		T_{Clk}	2.0382		2.0382				$30/f_{XTO}$		$30/f_{XTO}$	µs	A
1.2	Extended basic clock cycle	BR_Range0 BR_Range1 BR_Range2 BR_Range3	T_{XClk}	16.3057 8.1528 4.0764 2.0382		16.3057 8.1528 4.0764 2.0382				$8 \times T_{Clk}$ $4 \times T_{Clk}$ $2 \times T_{Clk}$ $1 \times T_{Clk}$		$8 \times T_{Clk}$ $4 \times T_{Clk}$ $2 \times T_{Clk}$ $1 \times T_{Clk}$	µs µs µs µs	A
2	Polling Mode													
2.1	Sleep time (see Figure 8-1, Figure 8-10 and Figure 13-1)	Sleep and XSleep are defined in the OPMODE register	T_{Sleep}	Sleep × X_{Sleep} × 1024 × 2.0382		Sleep × X_{Sleep} × 1024 × 2.0382				Sleep × X_{Sleep} × 1024 × T_{Clk}		Sleep × X_{Sleep} × 1024 × T_{Clk}	ms	A
2.2	Start-up time (see Figure 8-1 and Figure 8-4)	BR_Range0 BR_Range1 BR_Range2 BR_Range3	$T_{Startup}$	1827 1044 1044 653		1827 1044 1044 653				896.5 512.5 512.5 320.5 × T_{Clk}		896.5 512.5 512.5 320.5 × T_{Clk}	µs µs µs µs µs	A
2.3	Time for bit check (see Figure 8-1	Average bit-check time while polling, no RF applied (see Figure 8-5 and Figure 8-6) BR_Range0 BR_Range1 BR_Range2 BR_Range3	$T_{Bit\text{-}check}$		0.45 0.24 0.14 0.08						0.45 0.24 0.14 0.08		ms ms ms ms	C
2.4	Time for bit check (see Figure 8-1	Bit-check time for a valid input signal f_{Sig} (see Figure 8-5) $N_{Bit\text{-}check}$ = 0 $N_{Bit\text{-}check}$ = 3 $N_{Bit\text{-}check}$ = 6 $N_{Bit\text{-}check}$ = 9	$T_{Bit\text{-}check}$	$1 \times T_{XClk}$ $3/f_{Sig}$ $6/f_{Sig}$ $9/f_{Sig}$		$1 \times T_{XClk}$ $3.5/f_{Sig}$ $6.5/f_{Sig}$ $9.5/f_{Sig}$				$1 \times T_{XClk}$ $3/f_{Sig}$ $6/f_{Sig}$ $9/f_{Sig}$		$1 \times T_{Clk}$ $3.5/f_{Sig}$ $6.5/f_{Sig}$ $9.5/f_{Sig}$	ms ms ms ms	C
3	Receiving Mode													
3.1	Intermediate frequency		f_{IF}		987					$f_{IF} = f_{LO}/318$			kHz	A
3.2	Baud-rate range	BR_Range0 BR_Range1 BR_Range2 BR_Range3	BR_Range	1.0 1.8 3.2 5.6		1.8 3.2 5.6 10.0				BR_Range0 × 2 µs/T_{Clk} BR_Range1 × 2 µs/T_{Clk} BR_Range2 × 2 µs/T_{Clk} BR_Range3 × 2 µs/T_{Clk}			Kbit/s Kbit/s Kbit/s Kbit/s	A

*) Type means: A = 100% tested, B = 100% correlation tested, C = Characterized on samples, D = Design parameter

17. Electrical Characteristics Atmel ATA5723C (Continued)

All parameters refer to GND, T_{amb} = –40°C to +105°C, V_S = 4.5V to 5.5V, f_0 = 315MHz unless otherwise specified (For typical values: V_S = 5V, T_{amb} = 25°C).

No.	Parameter	Test Conditions	Symbol	f_{RF} = 315MHz 14.71875MHz Oscillator						Variable Oscillator			Unit	Type*
				Min.	Typ.	Max.	Min.	Typ.	Max.	Min.	Typ.	Max.		
3.3	Minimum time period between edges at pin DATA (see Figure 4-2 and Figure 8-8, Figure 8-9) (With the exception of parameter T_{Pulse})	BR_Range = BR_Range0 BR_Range1 BR_Range2 BR_Range3	t_{DATA_min}	163.06 81.53 40.76 20.38		163.06 81.53 40.76 20.38				$10 \times T_{XClk}$ $10 \times T_{XClk}$ $10 \times T_{XClk}$ $10 \times T_{XClk}$		$10 \times T_{XClk}$ $10 \times T_{XClk}$ $10 \times T_{XClk}$ $10 \times T_{XClk}$	µs µs µs µs	A
3.4	Maximum Low period at pin DATA (see Figure 4-2)	BR_Range = BR_Range0 BR_Range1 BR_Range2 BR_Range3	$t_{DATA_L_max}$	2120 1060 530 265		2120 1060 530 265				$130 \times T_{XClk}$ $130 \times T_{XClk}$ $130 \times T_{XClk}$ $130 \times T_{XClk}$		$130 \times T_{XClk}$ $130 \times T_{XClk}$ $130 \times T_{XClk}$ $130 \times T_{XClk}$	µs µs µs µs	A
3.5	Delay to activate the start-up mode (see Figure 8-12)		Ton1	19.36		21.4				$9.5 \times T_{Clk}$		$10.5 \times T_{Clk}$	µs	A
3.6	OFF command at pin POLLING/_ON (see Figure 8-11)		Ton2	16.3						$8 \times T_{Clk}$			µs	A
3.7	Delay to activate the sleep mode (see Figure 8-11)		Ton3	17.32		19.36				$8.5 \times T_{Clk}$		$9.5 \times T_{Clk}$	µs	A
3.8	Pulse on pin DATA at the end of a data stream (see Figure 10-3)	BR_Range = BR_Range0 BR_Range1 BR_Range2 BR_Range3	T_{Pulse}	16.3 8.15 4.07 2.04		16.3 8.15 4.07 2.04				$8 \times T_{Clk}$ $4 \times T_{Clk}$ $2 \times T_{Clk}$ $1 \times T_{Clk}$		$8 \times T_{Clk}$ $4 \times T_{Clk}$ $2 \times T_{Clk}$ $1 \times T_{Clk}$	µs µs µs µs	C

*) Type means: A = 100% tested, B = 100% correlation tested, C = Characterized on samples, D = Design parameter

17. Electrical Characteristics Atmel ATA5723C (Continued)

All parameters refer to GND, T_{amb} = –40°C to +105°C, V_S = 4.5V to 5.5V, f_0 = 315MHz unless otherwise specified (For typical values: V_S = 5V, T_{amb} = 25°C).

No.	Parameter	Test Conditions	Symbol	f_{RF} = 315MHz 14.71875MHz Oscillator						Variable Oscillator			Unit	Type*
				Min.	Typ.	Max.	Min.	Typ.	Max.	Min.	Typ.	Max.		
4	Configuration of the Receiver (see Figure 12-1 and Figure 13-1)													
4.1	Frequency of the reset marker	Frequency is stable within 50ms after POR	f_{RM}	119.78		119.78				1/ (4096 × T_{Clk})		1/ (4096 × T_{Clk})	Hz	A
4.2	Programming start pulse	BR_Range = BR_Range0 BR_Range1 BR_Range2 BR_Range3 after POR	t1	3310 2242 1708 1441 16175		11479 11479 11479 11479				1624 × T_{Clk} 1100 × T_{Clk} 838 × T_{Clk} 707 × T_{Clk} 7936 × T_{Clk}		5632 × T_{Clk} 5632 × T_{Clk} 5632 × T_{Clk} 5632 × T_{Clk}	µs µs µs µs µs	A
4.3	Programming delay period		t2	783		785				384.5 × T_{Clk}		385.5 × T_{Clk}	µs	A
4.4	Synchronization pulse		t3	261		261				128 × T_{Clk}		128 × T_{Clk}	µs	A
4.5	Delay until of the program window starts		t4	129		129				63.5 × T_{Clk}		63.5 × T_{Clk}	µs	A
4.6	Programming window		t5	522		522				256 × T_{Clk}		256 × T_{Clk}	µs	A
4.7	Time frame of a bit		t6	1044		1044				512 × T_{Clk}		512 × T_{Clk}	µs	A
4.8	Programming pulse		t7	130.5		522				64 × T_{Clk}		256 × T_{Clk}	µs	C
4.9	Equivalent acknowledge pulse: E_Ack		t8	261		261				128 × T_{Clk}		128 × T_{Clk}	µs	A
4.10	Equivalent time window		t9	526		526				258 × T_{Clk}		258 × T_{Clk}	µs	A
4.11	OFF-bit programming window		t10	916		916				449.5 × T_{Clk}		449.5 × T_{Clk}	µs	A
5	Data Clock (see Figure 9-1 and Figure 9-6)													
5.1	Minimum delay time between edge at DATA and DATA_CLK	BR_Range = BR_Range0 BR_Range1 BR_Range2 BR_Range3	t_{Delay2}	0 0 0 0		16.3057 8.1528 4.0764 2.0382				0 0 0 0		1 × T_{XClk} 1 × T_{XClk} 1 × T_{XClk} 1 × T_{XClk}	µs µs µs µs	C
5.2	Pulse width of negative pulse at pin DATA_CLK	BR_Range = BR_Range0 BR_Range1 BR_Range2 BR_Range3	$t_{P_DATA_CLK}$	65.2 32.6 16.3 8.15		65.2 32.6 16.3 8.15				4 × T_{XClk} 4 × T_{XClk} 4 × T_{XClk} 4 × T_{XClk}		4 × T_{XClk} 4 × T_{XClk} 4 × T_{XClk} 4 × T_{XClk}	µs µs µs µs	A

*) Type means: A = 100% tested, B = 100% correlation tested, C = Characterized on samples, D = Design parameter

18. Electrical Characteristics Atmel ATA5724C, ATA5728C

All parameters refer to GND, T_{amb} = –40°C to +105°C, V_S = 4.5V to 5.5V, f_0 = 433.92MHz and f_0 = 868.3MHz unless otherwise specified (for typical values: V_S = 5V, T_{amb} = 25°C).

No.	Parameter	Test Conditions	Symbol	f_{RF} = 433.92MHz 13.52875MHz Oscillator			f_{RF} = 868.3MHz, 13.55234MHz Oscillator			Variable Oscillator			Unit	Type*
				Min.	Typ.	Max.	Min.	Typ.	Max.	Min.	Typ.	Max.		
6	Basic Clock Cycle of the Digital Circuitry													
6.1	Basic clock cycle		T_{Clk}	2.0696		2.0696	2.066		2.066	$28/f_{XTO}$		$28/f_{XTO}$	µs	A
6.2	Extended basic clock cycle	BR_Range0 BR_Range1 BR_Range2 BR_Range3	T_{XClk}	16.557 8.278 4.139 2.069		16.557 8.278 4.139 2.069	16.528 8.264 4.132 2.066		16.528 8.264 4.132 2.066	$8 \times T_{Clk}$ $4 \times T_{Clk}$ $2 \times T_{Clk}$ $1 \times T_{Clk}$		$8 \times T_{Clk}$ $4 \times T_{Clk}$ $2 \times T_{Clk}$ $1 \times T_{Clk}$	µs µs µs µs	A
7	Polling Mode													
7.1	Sleep time (see Figure 8-1, Figure 8-10 and Figure 13-1)	Sleep and XSleep are defined in the OPMODE register	T_{Sleep}	Sleep × X_{Sleep} × 1024 × 2.0696		Sleep × X_{Sleep} × 1024 × 2.0696	Sleep × X_{Sleep} × 1024 × 2.066		Sleep × X_{Sleep} × 1024 × 2.066	Sleep × X_{Sleep} × 1024 × T_{Clk}		Sleep × X_{Sleep} × 1024 × T_{Clk}	ms	A
7.2	Start-up time (see Figure 8-1 and Figure 8-4)	BR_Range0 BR_Range1 BR_Range2 BR_Range3	$T_{Startup}$	1855 1060 1060 663		1855 1060 1060 663	1852 1058 1058 662		1852 1058 1058 662	896.5 512.5 512.5 320.5 × T_{Clk}		896.5 512.5 512.5 320.5 × T_{Clk}	µs µs µs µs µs	A
7.3	Time for bit check (see Figure 8-1	Average bit-check time while polling, no RF applied (see Figure 8-8 on page 14 and Figure 8-9 on page 15) BR_Range0 BR_Range1 BR_Range2 BR_Range3	$T_{Bit\text{-}check}$		0.45 0.24 0.14 0.08			0.45 0.24 0.14 0.08			0.45 0.24 0.14 0.08		ms ms ms ms	C
7.4	Time for bit check (see Figure 8-1	Bit-check time for a valid input signal f_{Sig} (see Figure 8-5 on page 13) $N_{Bit\text{-}check}$ = 0 $N_{Bit\text{-}check}$ = 3 $N_{Bit\text{-}check}$ = 6 $N_{Bit\text{-}check}$ = 9	$T_{Bit\text{-}check}$	$1 \times T_{XClk}$ $3/f_{Sig}$ $6/f_{Sig}$ $9/f_{Sig}$		$1 \times T_{XClk}$ $3.5/f_{Sig}$ $6.5/f_{Sig}$ $9.5/f_{Sig}$	$1 \times T_{XClk}$ $3/f_{Sig}$ $6/f_{Sig}$ $9/f_{Sig}$		$1 \times T_{XClk}$ $3.5/f_{Sig}$ $6.5/f_{Sig}$ $9.5/f_{Sig}$	$1 \times T_{XClk}$ $3/f_{Sig}$ $6/f_{Sig}$ $9/f_{Sig}$		$1 \times T_{Clk}$ $3.5/f_{Sig}$ $6.5/f_{Sig}$ $9.5/f_{Sig}$	ms ms ms ms	C
8	Receiving Mode													
8.1	Intermediate frequency		f_{IF}		987			947.9		$f_{IF} = f_{LO}/438$ for the 433.92MHz band (Atmel ATA5724C) $f_{IF} = f_{LO}/915$ for the 868.3MHz band (Atmel ATA5728C)			kHz	A
8.2	Baud-rate range	BR_Range0 BR_Range1 BR_Range2 BR_Range3	BR_Range	1.0 1.8 3.2 5.6		1.8 3.2 5.6 10.0	1.0 1.8 3.2 5.6		1.8 3.2 5.6 10.0	BR_Range0 × 2 µs/T_{Clk} BR_Range1 × 2 µs/T_{Clk} BR_Range2 × 2 µs/T_{Clk} BR_Range3 × 2 µs/T_{Clk}			Kbit/s Kbit/s Kbit/s Kbit/s	A

*) Type means: A = 100% tested, B = 100% correlation tested, C = Characterized on samples, D = Design parameter

18. Electrical Characteristics Atmel ATA5724C, ATA5728C (Continued)

All parameters refer to GND, T_{amb} = –40°C to +105°C, V_S = 4.5V to 5.5V, f_0 = 433.92MHz and f_0 = 868.3MHz unless otherwise specified (for typical values: V_S = 5V, T_{amb} = 25°C).

No.	Parameter	Test Conditions	Symbol	f_{RF} = 433.92MHz 13.52875MHz Oscillator			f_{RF} = 868.3MHz, 13.55234MHz Oscillator			Variable Oscillator			Unit	Type*
				Min.	Typ.	Max.	Min.	Typ.	Max.	Min.	Typ.	Max.		
8.3	Minimum time period between edges at pin DATA (see Figure 4-2, Figure 8-8, and Figure 8-9) (With the exception of parameter T_{Pulse})	BR_Range = BR_Range0 BR_Range1 BR_Range2 BR_Range3	t_{DATA_min}	165.5 82.8 41.4 20.7		165.5 82.8 41.4 20.7	165.3 82.6 41.3 20.6		165.3 82.6 41.3 20.6	$10 \times T_{XClk}$ $10 \times T_{XClk}$ $10 \times T_{XClk}$ $10 \times T_{XClk}$		$10 \times T_{XClk}$ $10 \times T_{XClk}$ $10 \times T_{XClk}$ $10 \times T_{XClk}$	µs µs µs µs	A
8.4	Maximum Low period at pin DATA (see Figure 4-2)	BR_Range = BR_Range0 BR_Range1 BR_Range2 BR_Range3	$t_{DATA_L_max}$	2152 1076 538 269		2152 1076 538 269	2148 1074 537 268.5		2148 1074 537 268.5	$130 \times T_{XClk}$ $130 \times T_{XClk}$ $130 \times T_{XClk}$ $130 \times T_{XClk}$		$130 \times T_{XClk}$ $130 \times T_{XClk}$ $130 \times T_{XClk}$ $130 \times T_{XClk}$	µs µs µs µs	A
8.5	Delay to activate the start-up mode (see Figure 8-12)		Ton1	19.6		21.7	19.6		21.7	$9.5 \times T_{Clk}$		$10.5 \times T_{Clk}$	µs	A
8.6	OFF command at pin POLLING/ _ON (see Figure 8-11)		Ton2	16.5			16.5			$8 \times T_{Clk}$			µs	A
8.7	Delay to activate the sleep mode (see Figure 8-11)		Ton3	17.6		19.6	17.6		19.6	$8.5 \times T_{Clk}$		$9.5 \times T_{Clk}$	µs	A
8.8	Pulse on pin DATA at the end of a data stream (see Figure 10-3)	BR_Range = BR_Range0 BR_Range1 BR_Range2 BR_Range3	T_{Pulse}	16.557 8.278 4.139 2.069		16.557 8.278 4.139 2.069	16.528 8.264 4.132 2.066		16.528 8.264 4.132 2.066	$8 \times T_{Clk}$ $4 \times T_{Clk}$ $2 \times T_{Clk}$ $1 \times T_{Clk}$		$8 \times T_{Clk}$ $4 \times T_{Clk}$ $2 \times T_{Clk}$ $1 \times T_{Clk}$	µs µs µs µs	C

*) Type means: A = 100% tested, B = 100% correlation tested, C = Characterized on samples, D = Design parameter

18. Electrical Characteristics Atmel ATA5724C, ATA5728C (Continued)

All parameters refer to GND, T_{amb} = –40°C to +105°C, V_S = 4.5V to 5.5V, f_0 = 433.92MHz and f_0 = 868.3MHz unless otherwise specified (for typical values: V_S = 5V, T_{amb} = 25°C).

No.	Parameter	Test Conditions	Symbol	f_{RF} = 433.92MHz 13.52875MHz Oscillator			f_{RF} = 868.3MHz, 13.55234MHz Oscillator			Variable Oscillator			Unit	Type*
				Min.	Typ.	Max.	Min.	Typ.	Max.	Min.	Typ.	Max.		
9	Configuration of the Receiver (see Figure 12-1 and Figure 13-1)													
9.1	Frequency of the reset marker	Frequency is stable within 50ms after POR	f_{RM}	117.9		117.9	118.2		118.2	1/ (4096 × T_{Clk})		1/ (4096 × T_{Clk})	Hz	A
9.2	Programming start pulse	BR_Range = BR_Range0 BR_Range1 BR_Range2 BR_Range3 after POR	t1	3361 2276 1734 1463 16425		11656 11656 11656 11656	3355 2272 1731 1460		11636 11636 11636 11636	1624 × T_{Clk} 1100 × T_{Clk} 838 × T_{Clk} 707 × T_{Clk} 7936 × T_{Clk}		5632 × T_{Clk} 5632 × T_{Clk} 5632 × T_{Clk} 5632 × T_{Clk}	µs µs µs µs µs	A
9.3	Programming delay period		t2	796		798	794		796	384.5 × T_{Clk}		385.5 × T_{Clk}	µs	A
9.4	Synchronization pulse		t3	265		265	264		264	128 × T_{Clk}		128 × T_{Clk}	µs	A
9.5	Delay until of the program window starts		t4	131		131	131		131	63.5 × T_{Clk}		63.5 × T_{Clk}	µs	A
9.6	Programming window		t5	530		530	529		529	256 × T_{Clk}		256 × T_{Clk}	µs	A
9.7	Time frame of a bit		t6	1060		1060	1058		1058	512 × T_{Clk}		512 × T_{Clk}	µs	A
9.8	Programming pulse		t7	132		530	132		529	64 × T_{Clk}		256 × T_{Clk}	µs	C
9.9	Equivalent acknowledge pulse: E_Ack		t8	265		265	264		264	128 × T_{Clk}		128 × T_{Clk}	µs	A
9.10	Equivalent time window		t9	534		534	533		533	258 × T_{Clk}		258 × T_{Clk}	µs	A
9.11	OFF-bit programming window		t10	930		930	929		929	449.5 × T_{Clk}		449.5 × T_{Clk}	µs	A
10	Data Clock (see Figure 9-1 and Figure 9-6)													
10.1	Minimum delay time between edge at DATA and DATA_CLK	BR_Range = BR_Range0 BR_Range1 BR_Range2 BR_Range3	t_{Delay2}	0 0 0 0		16.557 8.278 4.139 2.069	0 0 0 0		16.528 8.264 4.132 2.066	0 0 0 0		1 × T_{XClk} 1 × T_{XClk} 1 × T_{XClk} 1 × T_{XClk}	µs µs µs µs	C
10.2	Pulse width of negative pulse at pin DATA_CLK	BR_Range = BR_Range0 BR_Range1 BR_Range2 BR_Range3	$t_{P_DATA_CLK}$	66.2 33.1 16.5 8.3		62.2 33.1 16.5 8.3	66.1 33.0 16.5 8.25		66.1 33.0 16.5 8.25	4 × T_{XClk} 4 × T_{XClk} 4 × T_{XClk} 4 × T_{XClk}		4 × T_{XClk} 4 × T_{XClk} 4 × T_{XClk} 4 × T_{XClk}	µs µs µs µs	A

*) Type means: A = 100% tested, B = 100% correlation tested, C = Characterized on samples, D = Design parameter

19. Electrical Characteristics Atmel ATA5723C/24C/28C

All parameters refer to GND, T_{amb} = –40°C to +105°C, V_S = 4.5V to 5.5V, f_0 = 868.3MHz, f_0 = 433.92MHz and f_0 = 315MHz, unless otherwise specified. (For typical values: V_S = 5V, T_{amb} = 25°C)

No.	Parameters	Test Conditions	Symbol	Min.	Typ.	Max.	Unit	Type*
11	Current Consumption							
11.1	Current consumption	Sleep mode (XTO and polling logic active)	IS_{off}		170	290	µA	A
		IC active (start-up-, bit-check-, receiving mode) Pin DATA = H FSK ASK	IS_{on}		8.5 8.0	11.0 10.4	mA mA	A
12	LNA, Mixer, Polyphase Low-pass and IF Amplifier (Input Matched According to Figure 14-1 on page 29 Referred to RFIN)							
12.1	Third-order intercept point	LNA/mixer/IF amplifier 868MHz 433MHz 315MHz	IIP3		–18 –23 –24		dBm	C
12.2	LO spurious emission	Required according to I-ETS 300220	IS_{LORF}		–70	–57	dBm	A
12.3	System noise figure	With power matching |S11| < –10dB	NF		5		dB	B
12.4	LNA_IN input impedance	At 868.3MHz AT 433.92MHz At 315MHz	Zi_{LNA_IN}		(14.15 – j73.53) (19.3 – j113.3) (26.97 – j158.7)		Ω Ω Ω	C
12.5	1 dB compression point	At 868.3MHz AT 433.92MHz At 315MHz	IP_{1db}		–27.7 –32.7 –33.7		dBm	C
12.6	Image rejection	Within the complete image band		20	30		dB	A
12.7	Maximum input level	BER ≤ 10^{-3}, FSK mode ASK mode	P_{in_max}			–10 –10	dBm dBm	C
13	Local Oscillator							
13.1	Operating frequency range VCO	Atmel ATA5728C Atmel ATA5724C Atmel ATA5723C	f_{VCO}	868 431.5 312.5		870 436.5 317.5	MHz MHz MHz	A
13.2	Phase noise local oscillator	f_{osc} = 868.3MHz at 10MHz f_{osc} = 433.92MHz at 10MHz f_{osc} = 315MHz at 10MHz	L (fm)		–140 –143 –143	–130 –133 –133	dBC/Hz	B
13.3	Spurious of the VCO	At $\pm f_{XTO}$			–55	–45	dBC	B
13.4	XTO pulling	XTO pulling, appropriate load capacitance must be connected to XTAL, crystal CL1 and CL2 f_{XTAL} = 14.71875MHz (315MHz band) f_{XTAL} = 13.52875MHz (433MHz band) f_{XTAL} = 13.55234MHz (868MHz band)	f_{XTO}	–10ppm	f_{XTAL}	+10ppm	MHz	B
13.5	Series resonance resistor of the crystal	Parameter of the supplied crystal	R_S			120	Ω	B

*) Type means: A = 100% tested, B = 100% correlation tested, C = Characterized on samples, D = Design parameter

19. Electrical Characteristics Atmel ATA5723C/24C/28C (Continued)

All parameters refer to GND, T_{amb} = –40°C to +105°C, V_S = 4.5V to 5.5V, f_0 = 868.3MHz, f_0 = 433.92MHz and f_0 = 315MHz, unless otherwise specified. (For typical values: V_S = 5V, T_{amb} = 25°C)

No.	Parameters	Test Conditions	Symbol	Min.	Typ.	Max.	Unit	Type*
13.6	Static capacitance at pin XTAL1 to GND	Parameter of the supplied crystal and board parasitics	C_{L1}	–5%	18	+5%	pF	B
13.7	Static capacitance at pin XTAL2 to GND	Parameter of the supplied crystal and board parasitics	C_{L2}	–5%	18	+5%	pF	B
13.8	Crystal series resistor Rm at start-up	C_0 < 1.8pF, C_L = 9pF f_{XTAL} = 14.71875MHz			1.5		kΩ	B
		C_0 < 2.0pF, C_L = 9pF f_{XTAL} = 13.52875MHz f_{XTAL} = 13.55234MHz			1.5		kΩ	B
14	Analog Signal Processing (Input Matched According to Figure 14-1 on page 29 Referred to RFIN)							
14.1	Input sensitivity ASK 300kHz IF Filter (Atmel ATA5723C/ATA5724C)	ASK (level of carrier) BER ≤ 10^{-3}, 100% Mod f_{in} = 315MHz/433.92MHz V_S = 5V, T_{amb} = 25°C f_{IF} = 987kHz	P_{Ref_ASK}					
		BR_Range0		–111	–113	–115	dBm	B
		BR_Range1		–109.5	–111.5	–113.5	dBm	B
		BR_Range2		–109	–111	–113	dBm	B
		BR_Range3		–107	–109	–111	dBm	B
14.2	Input sensitivity ASK 600kHz IF Filter (Atmel ATA5728C)	ASK (level of carrier) BER ≤ 10^{-3}, 100% Mod f_{in} = 868.3MHz V_S = 5V, T_{amb} = 25°C f_{IF} = 948kHz	P_{Ref_ASK}					
		BR_Range0		–109	–111	–113	dBm	B
		BR_Range1		–107.5	–109.5	–111.5	dBm	B
		BR_Range2		–107	–109	–111	dBm	B
		BR_Range3		–105	–107	–109	dBm	B
14.3	Sensitivity variation ASK for the full operating range compared to T_{amb} = 25°C, V_S = 5V (Atmel ATA5723C/ ATA5724C/ATA5728C)	300kHz and 600kHz f_{in} = 315MHz/433.92MHz/868.3MHz $P_{ASK} = P_{Ref_ASK} + \Delta P_{Ref}$	ΔP_{Ref}	+2.5		–1.5	dB	B
14.4	Sensitivity variation ASK for full operating range including IF filter compared to T_{amb} = 25°C, V_S = 5V	300kHz version (Atmel ATA5723C/ATA5724C) f_{in} = 315MHz/433.92MHz f_{IF} = 987kHz f_{IF} = –110kHz to +110kHz f_{IF} = –140kHz to +140kHz $P_{ASK} = P_{Ref_ASK} + \Delta P_{Ref}$	ΔP_{Ref}	+5.5 +7.5		–1.5 –1.5	dB dB	B
		600kHz version (Atmel ATA5728C) f_{in} = 868.3MHz f_{IF} = 948kHz f_{IF} = –210kHz to +210kHz f_{IF} = –270kHz to +270kHz $P_{ASK} = P_{Ref_ASK} + \Delta P_{Ref}$	ΔP_{Ref}	+5.5 +7.5		–1.5 –1.5	dB dB	B

*) Type means: A = 100% tested, B = 100% correlation tested, C = Characterized on samples, D = Design parameter

19. Electrical Characteristics Atmel ATA5723C/24C/28C (Continued)

All parameters refer to GND, T_{amb} = –40°C to +105°C, V_S = 4.5V to 5.5V, f_0 = 868.3MHz, f_0 = 433.92MHz and f_0 = 315MHz, unless otherwise specified. (For typical values: V_S = 5V, T_{amb} = 25°C)

No.	Parameters	Test Conditions	Symbol	Min.	Typ.	Max.	Unit	Type*
14.5	Input sensitivity FSK 300kHz IF filter (Atmel ATA5723C/ATA5724C)	BER ≤ 10^{-3} f_{in} = 315MHz/433.92MHz V_S = 5V, T_{amb} = 25°C f_{IF} = 987kHz						
		BR_Range0 df = ±16kHz df = ±10kHz to ±30kHz	P_{Ref_FSK}	–104 –102	–107	–108.5 –108.5	dBm dBm	B
		BR_Range1 df = ±16kHz df = ±10kHz to ±30kHz	P_{Ref_FSK}	–102 –100	–105	–106.5 –106.5	dBm dBm	B
		BR_Range2 df = ±16kHz df = ±10kHz to ±30kHz	P_{Ref_FSK}	–100.5 –98.5	–103.5	–105 –105	dBm dBm	B
		BR_Range3 df = ±16kHz df = ±10kHz to ±30kHz	P_{Ref_FSK}	–98.5 –96.5	–101.5	–103 –103	dBm dBm	B
14.6	Input sensitivity FSK 600kHz IF filter (Atmel ATA5728C)	BER ≤ 10^{-3} f_{in} = 868.3MHz V_S = 5V, T_{amb} = 25°C f_{IF} = 948kHz						
		BR_Range0 df = ±16kHz to ±28kHz df = ±10kHz to ±100kHz	P_{Ref_FSK}	–102 –100	–105	–106.5 –106.5	dBm dBm	B
		BR_Range1 df = ±16kHz ±28kHz df = ±10kHz to ±100kHz	P_{Ref_FSK}	–100 –98	–103	–104.5 –104.5	dBm dBm	B
		BR_Range2 df = ±18kHz ±31kHz df = ±13kHz to ±100kHz	P_{Ref_FSK}	–98.5 –96.5	–101.5	–103 –103	dBm dBm	B
		BR_Range3 df = ±25kHz ±44kHz df = ±20kHz to ±100kHz	P_{Ref_FSK}	–96.5 –94.5	–99.5	–101 –101	dBm dBm	B
14.7	Sensitivity variation FSK for the full operating range compared to T_{amb} = 25°C, V_S = 5V (Atmel ATA5723C/ ATA5724C/ATA5728C)	300 kHz and 600 kHz versions f_{in} = 315MHz/433.92MHz/868.3MHz $P_{FSK} = P_{Ref_FSK} + \Delta P_{Ref}$	ΔP_{Ref}	+3		–1.5	dB	B

*) Type means: A = 100% tested, B = 100% correlation tested, C = Characterized on samples, D = Design parameter

19. Electrical Characteristics Atmel ATA5723C/24C/28C (Continued)

All parameters refer to GND, T_{amb} = –40°C to +105°C, V_S = 4.5V to 5.5V, f_0 = 868.3MHz, f_0 = 433.92MHz and f_0 = 315MHz, unless otherwise specified. (For typical values: V_S = 5V, T_{amb} = 25°C)

No.	Parameters	Test Conditions	Symbol	Min.	Typ.	Max.	Unit	Type*
14.8	Sensitivity variation FSK for the full operating range including IF filter compared to T_{amb} = 25°C, V_S = 5V	300kHz version (ATA5723C/ATA5724C) f_{in} = 315MHz/433.92MHz f_{IF} = 987kHz f_{IF} = –110kHz to +110kHz f_{IF} = –140kHz to +140kHz f_{IF} = –180kHz to +180kHz $P_{FSK} = P_{Ref_FSK} + \Delta P_{Ref}$	ΔP_{Ref}	+6 +8 +11		–2 –2 –2	dB dB dB	B
		600kHz version (Atmel ATA5728C) f_{in} = 868.3MHz f_{IF} = 948kHz f_{IF} = –150kHz to +150kHz f_{IF} = –200kHz to +200kHz f_{IF} = –260kHz to +150kHz $P_{FSK} = P_{Ref_FSK} + \Delta P_{Ref}$	ΔP_{Ref}	+6 +8 +11		–2 –2 –2	dB dB dB	B
14.9	S/N ratio to suppress in-band noise signals. Noise signals may have any modulation scheme	ASK mode FSK mode	SNR_{ASK} SNR_{FSK}		10 2	12 3	dB dB	C
14.10	Dynamic range RSSI amplifier		ΔR_{RSSI}		60		dB	A
14.11	RSSI output voltage range		V_{RSSI}	1		3.5	V	A
14.12	RSSI gain		G_{RSSI}		20		mV/dB	A
14.13	Lower cut-off frequency of the data filter	$f_{cu_DF} = \frac{1}{2 \times \pi \times 30\ k\Omega \times CDEM}$ CDEM = 33nF	fcu_DF	0.11	0.16	0.20	kHz	B
14.14	Recommended CDEM for best performance	BR_Range0 (default) BR_Range1 BR_Range2 BR_Range3	CDEM		39 22 12 8.2		nF nF nF nF	C
14.15	Edge-to-edge time period of the input data signal for full sensitivity	BR_Range0 (default) BR_Range1 BR_Range2 BR_Range3	t_{ee_sig}	270 156 89 50		1000 560 320 180	µs µs µs µs	C
14.16	Upper cut-off frequency data filter	Upper cut-off frequency programmable in 4 ranges using a serial mode word BR_Range0 (default) BR_Range1 BR_Range2 BR_Range3	fu	2.8 4.8 8.0 15.0	3.4 6.0 10.0 19.0	4.0 7.2 12.0 23.0	kHz kHz kHz kHz	B
14.17	Reduced sensitivity	300kHz version (ATA5723C/ATA5724C) R_{Sense} connected from pin SENS to V_S, input matched according to Figure 14-1 “Application Circuit”, f_{in} = 315MHz/433.92MHz, V_S = 5V, T_{amb} = +25°C					dBm (peak level)	
		R_{Sense} = 56kΩ	P_{Ref_Red}	–74	–79	–83	dBm	B
		R_{Sense} = 100kΩ	P_{Ref_Red}	–83	–88	–93	dBm	B

*) Type means: A = 100% tested, B = 100% correlation tested, C = Characterized on samples, D = Design parameter

19. Electrical Characteristics Atmel ATA5723C/24C/28C (Continued)

All parameters refer to GND, T_{amb} = –40°C to +105°C, V_S = 4.5V to 5.5V, f_0 = 868.3MHz, f_0 = 433.92MHz and f_0 = 315MHz, unless otherwise specified. (For typical values: V_S = 5V, T_{amb} = 25°C)

No.	Parameters	Test Conditions	Symbol	Min.	Typ.	Max.	Unit	Type*
14.18	Reduced sensitivity	600kHz version (Atmel ATA5728C) R_{Sense} connected from pin SENS to V_S, input matched according to Figure 14-1 "Application Circuit", f_{in} = 868.3MHz, V_S = 5V, T_{amb} = +25°C					dBm (peak level)	
		R_{Sense} = 56kΩ	P_{Ref_Red}	–63	–68	–73	dBm	B
		R_{Sense} = 100kΩ	P_{Ref_Red}	–72	–77	–82	dBm	B
14.19	Reduced sensitivity variation over full operating range	R_{Sense} = 56kΩ R_{Sense} = 100kΩ $P_{Red} = P_{Ref_Red} + \Delta P_{Red}$	ΔP_{Red}	5 5	0 0	0 0	dB dB	C
14.20	Reduced sensitivity variation for different values of R_{Sense}	Values relative to R_{Sense} = 56kΩ R_{Sense} = 56kΩ R_{Sense} = 68kΩ R_{Sense} = 82kΩ R_{Sense} = 100kΩ	ΔP_{Red}		0 –3.5 –6.0 –9.0		dB dB dB dB	C
14.21	Threshold voltage for reset		$V_{ThRESET}$	1.95	2.8	3.75	V	A
15	Digital Ports							
15.1	Data output - Saturation voltage Low - max voltage at pin DATA - quiescent current - short-circuit current - ambient temp. in case of permanent short-circuit Data input - Input voltage Low - Input voltage High	$I_{ol} \leq$ 12mA I_{ol} = 2mA V_{oh} = 20V V_{ol} = 0.8V to 20V V_{oh} = 0V to 20V	V_{ol} V_{ol} V_{oh} I_{qu} I_{ol_lim} t_{amb_sc} V_{Il} V_{ich}	 13 0.65 × V_S	0.35 0.08 30 	0.8 0.3 20 20 45 85 0.35 × V_S	V V V µA mA °C V V	A
15.2	DATA_CLK output - Saturation voltage Low - Saturation voltage High	IDATA_CLK = 1mA IDATA_CLK = –1mA	V_{ol} V_{oh}	 V_S – 0.4V	0.1 V_S – 0.15V	0.4	V V	A
15.3	IC_ACTIVE output - Saturation voltage Low - Saturation voltage High	IIC_ACTIVE = 1mA IIC_ACTIVE = –1mA	V_{ol} V_{oh}	 V_S – 0.4V	0.1 V_S – 0.15V	0.4	V V	A
15.4	POLLING/_ON input - Low level input voltage - High level input voltage	Receiving mode Polling mode	V_{Il} V_{Ih}	 0.8 × V_S		0.2 × V_S	V V	A
15.5	MODE pin - High level input voltage	Test input must always be set to high	V_{Ih}	0.8 × V_S			V	A
15.6	TEST 1 pin - Low level input voltage	Test input must always be set to low	V_{Il}			0.2 × V_S	V	A

*) Type means: A = 100% tested, B = 100% correlation tested, C = Characterized on samples, D = Design parameter

20. Ordering Information

Extended Type Number	Package	MOQ	Remarks
ATA5723P3C-TKQW	TSSOP20	4,000	315MHz version
ATA5724P3C-TKQW	TSSOP20	4,000	433MHz version
ATA5728P6C-TKQW	TSSOP20	4,000	868MHz version

21. Package Information

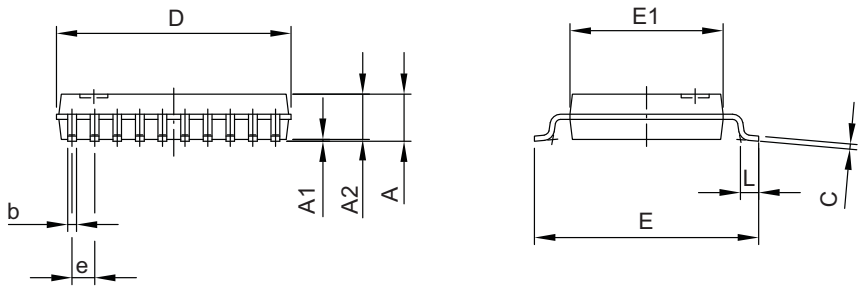

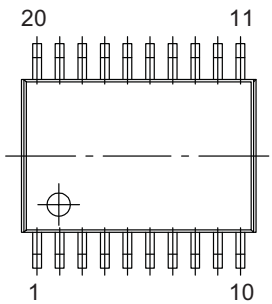

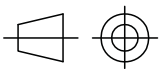

technical drawings according to DIN specifications

Dimensions in mm

COMMON DIMENSIONS (Unit of Measure = mm)				
Symbol	**MIN**	**NOM**	**MAX**	**NOTE**
A	0.9	1.0	1.1	
A1	0.05	0.1	0.15	
A2	0.85	0.9	0.95	
D	6.4	6.5	6.6	
E	6.3	6.4	6.5	
E1	4.3	4.4	4.5	
L	0.5	0.6	0.7	
C	0.1	0.15	0.2	
b	0.2	0.25	0.3	
e		0.65 BSC		

02/04/16

	TITLE	GPC	DRAWING NO.	REV.
Atmel **Package Drawing Contact:** packagedrawings@atmel.com	**Package: TSSOP20** 4.4mm		6.543-5182.01-4	2

22. Revision History

Please note that the following page numbers referred to in this section refer to the specific revision mentioned, not to this document.

Revision No.	History
9248E-RKE-03/16	• Section 20 “Ordering Information” on page 42 updated • Section 21 “Package Information” on page 42 updated
9248D-RKE-10/14	• Section 20 “Ordering Information” on page 42 updated • Section 21 “Package Information” on page 42 updated
9248C-RKE-08/14	• Put datasheet in the latest template

Atmel | Enabling Unlimited Possibilities®

Atmel Corporation 1600 Technology Drive, San Jose, CA 95110 USA **T:** (+1)(408) 441.0311 **F:** (+1)(408) 436.4200 | **www.atmel.com**

© 2016 Atmel Corporation. / Rev.: 9248E–RKE–03/16

Atmel®, Atmel logo and combinations thereof, Enabling Unlimited Possibilities®, and others are registered trademarks or trademarks of Atmel Corporation in U.S. and other countries. Other terms and product names may be trademarks of others.

DISCLAIMER: The information in this document is provided in connection with Atmel products. No license, express or implied, by estoppel or otherwise, to any intellectual property right is granted by this document or in connection with the sale of Atmel products. EXCEPT AS SET FORTH IN THE ATMEL TERMS AND CONDITIONS OF SALES LOCATED ON THE ATMEL WEBSITE, ATMEL ASSUMES NO LIABILITY WHATSOEVER AND DISCLAIMS ANY EXPRESS, IMPLIED OR STATUTORY WARRANTY RELATING TO ITS PRODUCTS INCLUDING, BUT NOT LIMITED TO, THE IMPLIED WARRANTY OF MERCHANTABILITY, FITNESS FOR A PARTICULAR PURPOSE, OR NON-INFRINGEMENT. IN NO EVENT SHALL ATMEL BE LIABLE FOR ANY DIRECT, INDIRECT, CONSEQUENTIAL, PUNITIVE, SPECIAL OR INCIDENTAL DAMAGES (INCLUDING, WITHOUT LIMITATION, DAMAGES FOR LOSS AND PROFITS, BUSINESS INTERRUPTION, OR LOSS OF INFORMATION) ARISING OUT OF THE USE OR INABILITY TO USE THIS DOCUMENT, EVEN IF ATMEL HAS BEEN ADVISED OF THE POSSIBILITY OF SUCH DAMAGES. Atmel makes no representations or warranties with respect to the accuracy or completeness of the contents of this document and reserves the right to make changes to specifications and products descriptions at any time without notice. Atmel does not make any commitment to update the information contained herein. Unless specifically provided otherwise, Atmel products are not suitable for, and shall not be used in, automotive applications. Atmel products are not intended, authorized, or warranted for use as components in applications intended to support or sustain life.

SAFETY-CRITICAL, MILITARY, AND AUTOMOTIVE APPLICATIONS DISCLAIMER: Atmel products are not designed for and will not be used in connection with any applications where the failure of such products would reasonably be expected to result in significant personal injury or death (“Safety-Critical Applications”) without an Atmel officer's specific written consent. Safety-Critical Applications include, without limitation, life support devices and systems, equipment or systems for the operation of nuclear facilities and weapons systems. Atmel products are not designed nor intended for use in military or aerospace applications or environments unless specifically designated by Atmel as military-grade. Atmel products are not designed nor intended for use in automotive applications unless specifically designated by Atmel as automotive-grade.