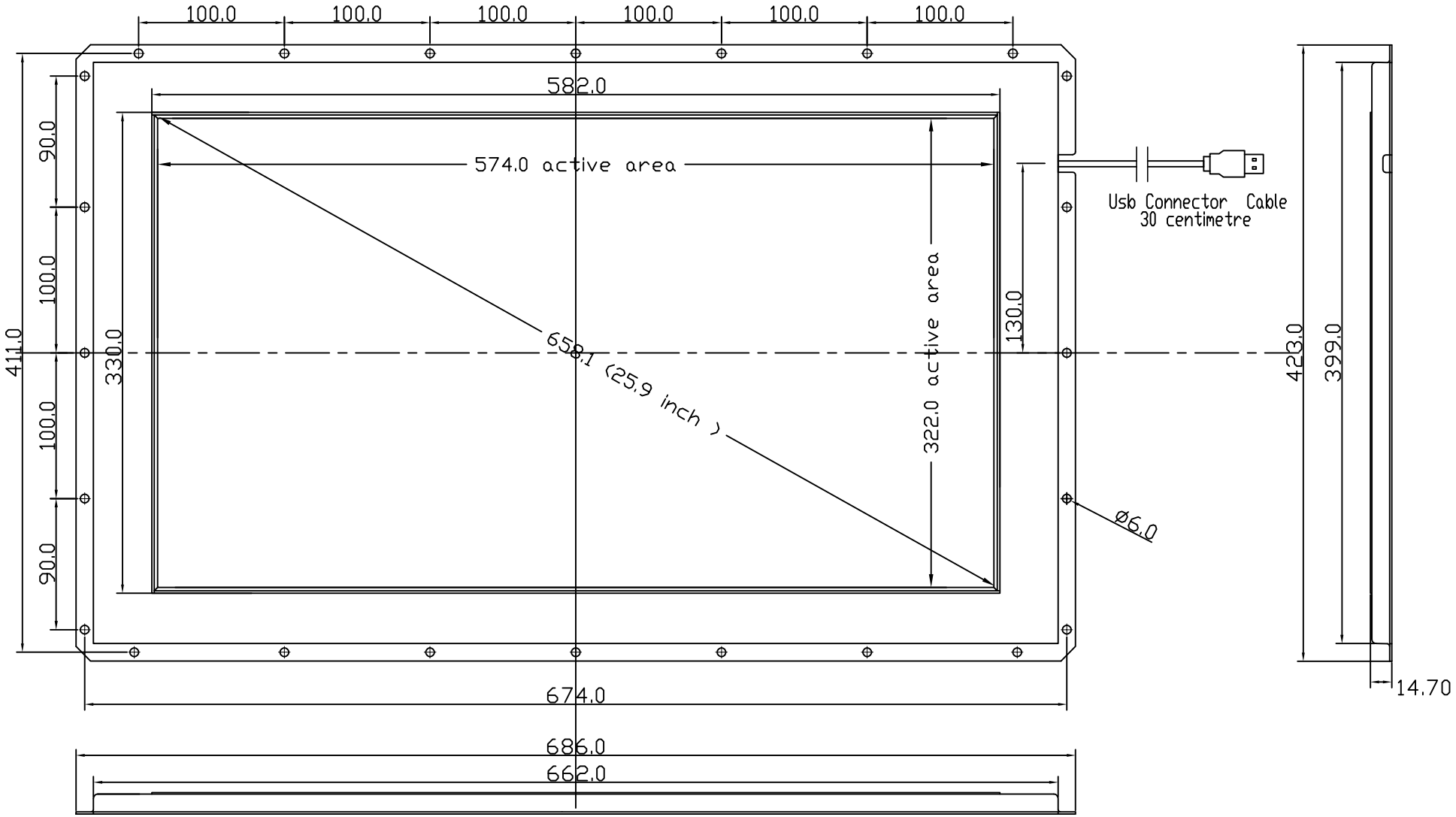

request:

1 toughened glass

IRTOUCH SYSTEMS BEIJING IRTOUCHSYSTEMS CO., LTD.			EXPLODE No:	Rev: A	PROJECTION
MATERIAL:	DO NOT SCALE DRAWING ALL DIMENSIONS ARE MM TOLERANCE: LINEAR TOL: .X=±1.0 .XX=±0.5 ANGULAR TOL: =±1.0°	PART No: K26		DRAW No:	
FINISH:		PART NAME: Touchscreen for lcd(USB port)		SCALE: 1:1	
ACTION:	DESIGNER: DATE:	CHECKED: DATE:	APPROVED: DATE:	SHEET 1 OF 1	A4