UNCONTROLLED DOCUMENT

PART NUMBER	REV.
LCM-X01604DXX	A

REV.	E.C.N. NUMBER AND REVISION COMMENTS	DATE
A	E.C.N. #10464./	10-9-98

P/N PREFIX/SUFFIX TABLE

LCM-X		DXX	DESCRIPTION
STANDARD	S	SR	STN, REFLECTIVE
		SF	STN, TRANSFLECTIVE(W/ BACKLIGHT)
HIGH TEMP.	H	TR	TN, REFLECTIVE
		TF	TN, TRANSFLECTIVE(W/ BACKLIGHT)

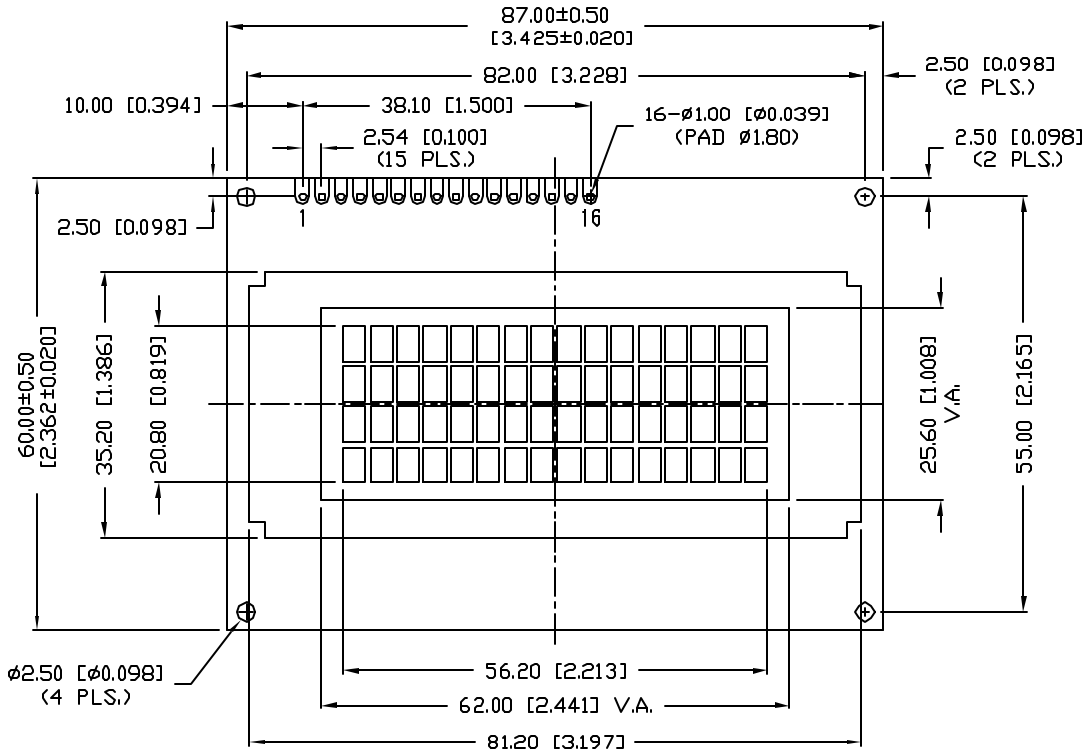

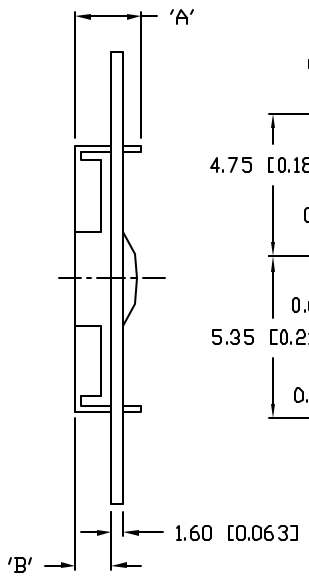

CHARACTER DETAIL

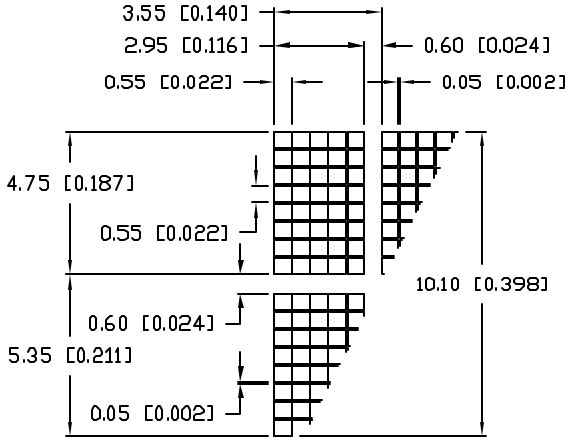

TYPE DIM.	A	B
WITH BACKLIGHT	12.7	8.8
NO BACKLIGHT	8.9	4.8

CAUTION: STATIC SENSITIVE DEVICE
FOLLOW PROPER E.S.D. HANDLING PROCEDURES WHEN WORKING WITH THIS PART.

UNCONTROLLED DOCUMENT

*UNLESS OTHERWISE SPECIFIED TOLERANCE IS ±0.25mm (±0.010")

REV.	PART NUMBER
A	LCM-X01604DXX

4.75mm TALL, 5 x 8 DOT MATRIX,
16 x 4 CHARACTER LCD MODULE, 1/16 DUTY, 1/5 BIAS.

CONFIDENTIAL INFORMATION
THE INFORMATION CONTAINED IN THIS DOCUMENT IS THE PROPERTY OF LUMEX INC. EXCEPT AS SPECIFICALLY AUTHORIZED IN WRITING BY LUMEX INC., THE HOLDER OF THIS DOCUMENT SHALL KEEP ALL INFORMATION CONTAINED HEREIN CONFIDENTIAL AND SHALL PROTECT SAME IN WHOLE OR IN PART FROM DISCLOSURE AND DISSEMINATION TO ALL THIRD PARTIES.

RELIABILITY NOTE
OUR MANY YEARS OF EXPERIENCE DATA ACCUMULATION INDICATE THAT SOLDER HEAT IS A MAJOR CAUSE OF EARLY AND FUTURE FAILURE. PLEASE PAY ATTENTION TO YOUR SOLDERING PROCESS.

LUMEX INCORPORATED
290 E. HELLEN ROAD
PALATINE, ILLINOIS 60067
PHONE: 1-847-359-2790
WEB: HTTP://WWW.LUMEX.COM

DRAWN BY:	CHECKED BY:	APPROVED BY:	DATE: 8-10-98
SA/BC			PAGE: 1 OF 2
			SCALE: N/A