MOTOROLA

MC54/74F182

LIFETIME BUY

LAST ORDER 31/03/99 LAST SHIP 30/09/99

CARRY LOOKAHEAD GENERATOR

The MC54/74F182 is a high-speed carry lookahead generator. It is generally used with the F181, F381 or 29F01 4-bit arithmetic logic unit to provide high-speed lookahead over word lengths of more than four bits.

- Provides Lookahead Carries Across a Group of Four ALUs
- Multi-level Lookahead High-speed Arithmetic Operation Over Long Word Lengths

CARRY LOOKAHEAD GENERATOR

FAST™ SCHOTTKY TTL

CONNECTION DIAGRAM DIP (TOP VIEW)

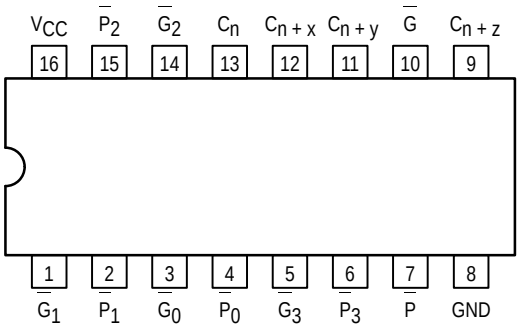

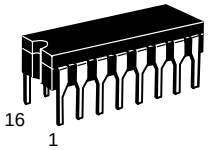

J SUFFIX
CERAMIC
CASE 620-09

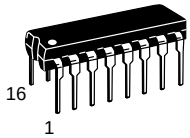

N SUFFIX
PLASTIC
CASE 648-08

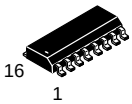

D SUFFIX
SOIC
CASE 751B-03

ORDERING INFORMATION

MC54FXXXJ	Ceramic
MC74FXXXN	Plastic
MC74FXXXD	SOIC

LOGIC DIAGRAM

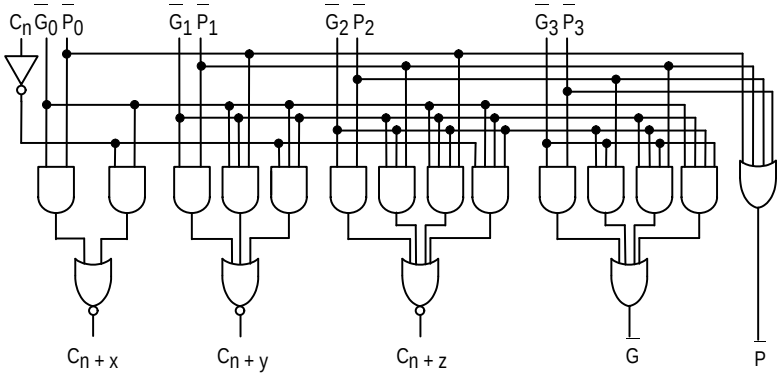

LOGIC SYMBOL

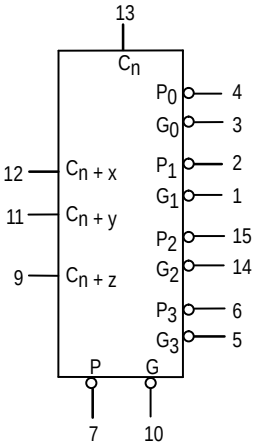

V_{CC} = PIN 16
GND = PIN 8

FUNCTION TABLE

Inputs									Outputs				
C_n	$\overline{G}_0$	$\overline{P}_0$	$\overline{G}_1$	$\overline{P}_1$	$\overline{G}_2$	$\overline{P}_2$	$\overline{G}_3$	$\overline{P}_3$	C_{n+x}	C_{n+y}	C_{n+z}	$\overline{G}$	$\overline{P}$
X	H	H							L				
L	H	X							L				
X	L	X							H				
H	X	L							H				
X	X	X	H	H						L			
X	H	H	H	X						L			
L	H	X	H	X						L			
X	X	X	L	X						H			
X	L	X	X	L						H			
H	X	L	X	L						H			
X	X	X	X	X	H	H					L		
X	X	X	H	H	H	X					L		
X	H	H	H	X	H	X					L		
L	H	X	H	X	H	X					L		
X	X	X	X	X	L	X					H		
X	X	X	L	X	X	L					H		
X	L	X	X	L	X	L					H		
H	X	L	X	L	X	L					H		
	X		X	X	X	X	H	H				H	
	X		X	X	H	H	H	X				H	
	X		H	H	H	X	H	X				H	
	H		H	X	H	X	H	X				H	
	X		X	X	X	X	L	X				L	
	X		X	X	L	X	X	L				L	
	X		L	X	X	L	X	L				L	
	L		X	L	X	L	X	L				L	
		H		X		X		X					H
		X		H		X		X					H
		X		X		H		X					H
		X		X		X		H					H
		L		L		L		L					L

H = HIGH Voltage Level
L = LOW Voltage Level
X = Don't Care

GUARANTEED OPERATING RANGES

Symbol	Parameter		Min	Typ	Max	Unit
V_{CC}	Supply Voltage	54,74	4.5	5.0	5.5	V
T_A	Operating Ambient Temperature Range	54	–55	25	125	°C
		74	0	25	70	
I_{OH}	Output Current — High	54, 74			–1.0	mA
I_{OL}	Output Current — Low	54, 74			20	mA

DC CHARACTERISTICS OVER OPERATING TEMPERATURE RANGE (unless otherwise specified)

Symbol	Parameter		Limits Min	Limits Typ	Limits Max	Unit	Test Conditions	
V_{IH}	Input HIGH Voltage		2.0			V	Guaranteed Input HIGH Voltage	
V_{IL}	Input LOW Voltage				0.8	V	Guaranteed Input LOW Voltage	
V_{IK}	Input Clamp Diode Voltage				–1.2	V	I_{IN} = –18 mA	V_{CC} = MIN
V_{OH}	Output HIGH Voltage	54, 74	2.5	3.4		V	I_{OH} = –1.0 mA	V_{CC} = 4.50 V
		74	2.7	3.4		V	I_{OH} = –1.0 mA	V_{CC} = 4.75 V
V_{OL}	Output LOW Voltage			0.35	0.5	V	I_{OL} = 20 mA	V_{CC} = MIN
I_{IH}	Input HIGH Current				20	µA	V_{IN} = 2.7 V	V_{CC} = MAX
					100	µA	V_{IN} = 7.0 V	V_{CC} = MAX
I_{IL}	Input LOW Current	C_n Input			–1.2	mA	V_{IN} = 0.5 V	V_{CC} = MAX
		$\overline{P}_3$ Input			–2.4			
		$\overline{P}_2$ Input			–3.6			
		$\overline{G}_3$, $\overline{P}_0$, $\overline{P}_1$ Inputs			–4.8			
		$\overline{G}_0$, $\overline{G}_2$ Inputs			–8.4			
		$\overline{G}_1$ Input			–9.6			
I_{OS}	Output Short Circuit Current (Note 2)		–60		–150	mA	V_{OUT} = 0 V	V_{CC} = MAX
I_{CCH}	Power Supply Current (All Outputs HIGH)			18.4	28	mA	$\overline{P}_3$, $\overline{G}_3$ = 4.5 V All Other Inputs = GND	V_{CC} = MAX
I_{CCL}	Power Supply Current (All Outputs LOW)			23.5	36	mA	$\overline{G}_0$, $\overline{G}_1$, $\overline{G}_2$ = 4.5 V All Other Inputs = GND	V_{CC} = MAX

NOTES:
1. For conditions shown as MIN or MAX, use the appropriate value specified under guaranteed operating ranges.
2. No more than one output should be shorted at a time, nor for more than 1 second.

AC CHARACTERISTICS

Symbol	Parameter	54/74F T_A = +25°C V_{CC} = +5.0 V C_L = 50 pF			54F T_A = –55°C to +125°C V_{CC} = 5.0 V ± 10% C_L = 50 pF		74F T_A = 0°C to +70°C V_{CC} = 5.0V ± 10% C_L = 50 pF		Unit
		Min	Typ	Max	Min	Max	Min	Max	
t_{PLH} t_{PHL}	Propagation Delay C_n to C_{n+x}, C_{n+y}, C_{n+z}	3.0 3.0	6.6 6.8	8.5 9.0	3.0 3.0	10.5 11	3.0 3.0	9.5 10	ns
t_{PLH} t_{PHL}	Propagation Delay $\overline{P}_0$, $\overline{P}_1$, or $\overline{P}_2$ to C_{n+x}, C_{n+y}, C_{n+z}	2.5 1.5	6.2 3.7	8.0 5.0	2.5 1.5	10.7 6.5	2.5 1.5	9.0 6.0	ns
t_{PLH} t_{PHL}	Propagation Delay $\overline{G}_0$, $\overline{G}_1$, or $\overline{G}_2$ to C_{n+x}, C_{n+y}, C_{n+z}	2.5 1.5	6.5 3.9	8.5 5.2	2.5 1.5	10.5 6.5	2.5 1.5	9.5 6.0	ns

AC CHARACTERISTICS (Continued)

Symbol	Parameter	54/74F $T_A = +25°C$ $V_{CC} = +5.0$ V $C_L = 50$ pF Min	Typ	Max	54F $T_A = -55°C$ to $+125°C$ $V_{CC} = 5.0$ V ± 10% $C_L = 50$ pF Min	Max	74F $T_A = 0°C$ to $+70°C$ $V_{CC} = 5.0$V ± 10% $C_L = 50$ pF Min	Max	Unit
t_{PLH}	Propagation Delay	2.0	7.9	10	2.0	12.5	2.0	11	ns
t_{PHL}	$\overline{P}_1$, $\overline{P}_2$, or $\overline{P}_3$ to $\overline{G}$	2.0	6.0	8.0	2.0	9.5	2.0	9.0	
t_{PLH}	Propagation Delay	2.0	8.3	10.5	2.0	12.5	2.0	11.5	ns
t_{PHL}	$\overline{G}_n$ to $\overline{G}$	1.5	5.7	7.5	1.5	9.5	1.5	8.5	
t_{PLH}	Propagation Delay	2.5	5.7	7.5	2.5	11	2.5	8.5	ns
t_{PHL}	$\overline{P}_n$ to $\overline{P}$	2.5	4.1	5.5	2.5	7.5	2.5	6.5	

FUNCTIONAL DESCRIPTION

The F182 carry lookahead generator accepts up to four pairs of active-LOW Carry Propagate (P_0-P_3) and carry Generate (G_0-G_3) signals and an active-HIGH Carry input (C_n) and provides anticipated active-HIGH carries (C_{n+x}, C_{n+y}, C_{n+z}) across four groups of binary adders. The F182 also has active-LOW Carry Propagate (P) and Carry Generate (G) outputs which may be used for further levels of lookahead. The logic equations provided at the output are:

$C_{n+x} = G_0 + P_0C_n$

$C_{n+y} = G_1 + P_1G_0 + P_1P_0C_n$

$C_{n+z} = G_2 + P_2G_1 + P_2P_1G_0 + P_2P_1P_0C_n$

$\overline{G} = \overline{G_3 + P_3G_2 + P_3P_2G_1 + P_3P_2P_1G_0}$

$\overline{P} = P_3P_2P_1P_0$

Also, the F182 can be used with binary ALUs in an active-LOW or active-HIGH input operand mode. The connections (Figure 1) to and from the ALU to the carry lookahead generator are identical in both cases. Carries are rippled between lookahead blocks. The critical speed path follows the circled numbers. There are several possible arrangements for the carry interconnects, but all achieve about the same speed. A 28-bit ALU is formed by dropping the last F181 or F381.

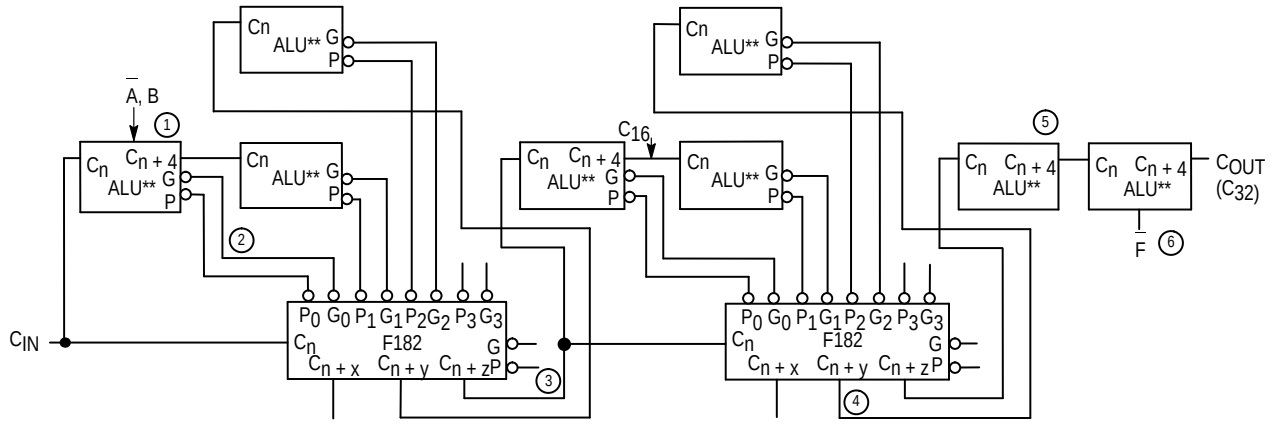

** ALUs may be either F181, F381, or 2901A.

Figure 1. 32-Bit ALU with Ripple Carry Between 16-Bit Lookahead ALUs

LIFETIME BUY

LAST ORDER 31/03/99 LAST SHIP 30/09/99

Mfax is a trademark of Motorola, Inc.

How to reach us:

USA/EUROPE/Locations Not Listed: Motorola Literature Distribution; P.O. Box 5405, Denver, Colorado 80217.
1–303–675–2140 or 1–800–441–2447

JAPAN: Motorola Japan Ltd.; SPS, Technical Information Center, 3–20–1, Minami–Azabu. Minato–ku, Tokyo 106–8573 Japan.
81–3–3440–3569

ASIA/PACIFIC: Motorola Semiconductors H.K. Ltd.; Silicon Harbour Centre, 2 Dai King Street, Tai Po Industrial Estate, Tai Po, N.T., Hong Kong. 852–26668334

Customer Focus Center: 1–800–521–6274
Mfax™: RMFAX0@email.sps.mot.com – TOUCHTONE 1–602–244–6609
Motorola Fax Back System – US & Canada ONLY 1–800–774–1848
– http://sps.motorola.com/mfax/

HOME PAGE: http://motorola.com/sps/

MOTOROLA

◊