ITEM NO.	PART NUMBER	DESCRIPTION	QTY.	COMPONENT NOTES
1	50-00025	Connector, dc jack, 5.5x2.1xL17.4 mm, molding style	5	
2	30-00007	Wire, 2C BC, 18 AWG, UL2468, 300V, 80C, 4.4 mm, VW-1, PVC, 87A	5	
3	24-00004	Overmold, PVC	5	black
4	24-00219	Overmold, splitter, Ø 8.0 mm by 10.0x22.6 mm	1	black
5	PCB	Splitter PCB, FR4, two-layer, tin, 13.0x16.5x1.6 mm	1	

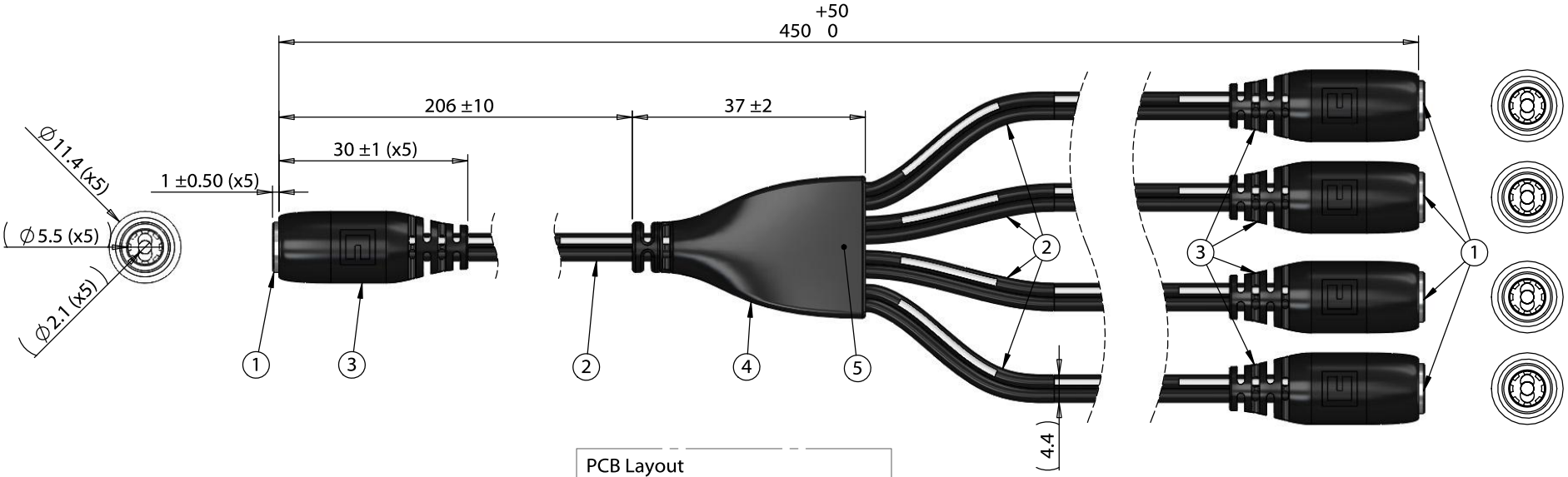

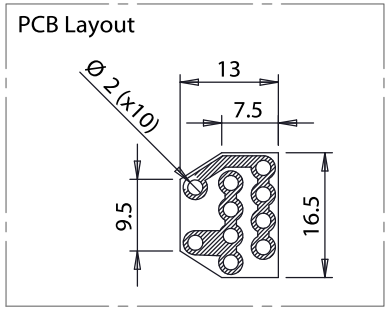

Wiring Diagram		
50-00025	wire color	50-00025
center	black with stripe	center
sleeve	black	sleeve

Notes:
Functionally equivalent components may be substituted

Revision:	Date:	Description:
A	4/11/2018	Initial release

Prepared: JP — Digitally signed by JP Date: 2018.04.11 17:10:36 -07'00'

Verified: AG — Digitally signed by AG Date: 2018.04.16 16:26:07 -07'00'

Dimensions are in millimeters.
Tolerances:
X: ± 0.5 mm
X.X: ± 0.3 mm
X.XX: ± 0.05 mm

Notes:

RoHS compliant

Function test: no open, no short circuit, no intermittent

Description:

Cable, 450 mm, 5.5x2.1 mm 50-00025 dc jack to y-split to 4x 5.5x2.1 mm dc jack, 18 AWG, UL2468

TENSILITY
tel 1.541.323.3228 800 877.670.7118
fax 1.541.323.4202 web tensility.com

Size: A
Part number: 10-02748
Scale: 1:1
Sheet 1 of 1

5 4 3 2 1

To see a custom version of this cable assembly, call Tensility at 541-323-3228 or email engineering@tensility.com