THIS COPY IS PROVIDED ON A RESTRICTED BASIS AND IS NOT TO BE USED IN ANY WAY DETRIMENTAL TO THE INTERESTS OF PANDUIT CORP.

PANDUIT PART #	STUD SIZE		DIMENSIONS in. [mm]				
	ENGLISH	METRIC	L ± .03 [0,51]	W ± .01 [0,25]	C ± .02 [0,38]	M ± .03 [0,51]	H ± .01 [0,25]
PV10-6F	#6	M3,5	1.01 [25,65]	.31 [7,87]	.25 [6,35]	.81 [20,57]	.14 [3,56]
PV10-8F	#8	M4	1.04 [26,42]	.37 [9,40]	.25 [6,35]	.81 [20,57]	.17 [4,32]
PV10-10F	#10	--	1.04 [26,42]	.37 [9,40]	.25 [6,35]	.81 [20,57]	.20 [5,08]
PMV6-5F	--	M5	1.04 [26,42]	.38 [9,65]	.22 [5,59]	.81 [20,57]	.21 [5,33]
PV10-14F	1/4"	M6	1.14 [28,96]	.49 [12,45]	.32 [8,13]	.88 [22,35]	.26 [6,60]

UL & CSA TOOLS (DIES)
CT-100A*
CT-600-A (CT-550CH)
CT-1550
CT-1551
CT-2500 (CT-2550CH)

*RATED FOR 300V, 75°C

PANDUIT APPROVED TOOLS
CT-160
CT-260
CT-400
CT-460

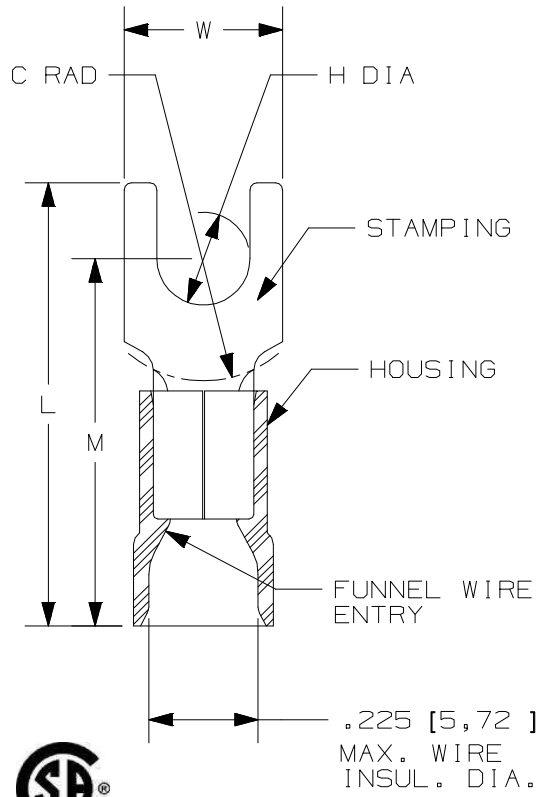

NOTES:

1. UL LISTED & CSA CERTIFIED FOR:
   A. 12-10 AWG [4,0-6,0 mm²] SOLID OR STRANDED COPPER WIRE
   B. 221°F [105°C] MAX. OPERATING TEMPERATURE
   C. 600V. MAX. BLDG WIRE
      (1000 V. MAX. IN SIGNS, FIXTURES & LUMINAIRES)

2. SEE www.panduit.com FOR PACKAGE QUANTITIES

3. MATERIAL:
   A. STAMPING: .040" [1,02] THK COPPER, TIN PLATED
   B. HOUSING: VINYL, YELLOW

4. DIMENSIONS IN BRACKETS ARE METRIC EQUIVALENT

5. WIRE STRIP LENGTH: 5/16 $^{+1/32}_{-0}$ [7,9 $^{+0,8}_{-0}$]

c UL us
LISTED
587H
E52164

CSA
CERTIFIED
LR31212

REV	DATE	BY	CHK	APR	DESCRIPTION	ECN
06	4/15	TMR	JHNU	RGB	ADDED CSA BACK TO DWG AND CLARIFIED TOOL CHART	A41189BA-N41189
05	07/14	MBY	JHNU	RGB	REVISED NOTES, MOVED TOOLS TO TABLE, REVISED CERTIFICATION	A41189BA-N41189
04	07.12.12	BDK	LCA	VMB	ADDED PMV6-5F. ADDED METRIC EQUIVALENT. CHANGE PACKAGING NOTE. REVISED INSTALLATION TOOLS NOTE. BROUGHT DRAWING TO CURRENT STANDARDS.	N41189BA-DC

TITLE
2 PC. VINYL INSULATED,
#12-10 BARREL, FORKS
CUSTOMER DRAWING

ITEM REVISION NAME: N41189BA/06
DATASET FILE NAME: N41189BA_DC/06

PANDUIT

UNLESS OTHERWISE SPECIFIED, DIMENSIONAL TOLERANCES ARE: IN [mm]
.X ± .XXX ±
.XX ± ANGLES ±
THIRD ANGLE PROJECTION

MATERIAL: SEE NOTES

DRAWING NUMBER: A41189

DRAWN BY	DATE	CHK	SCALE		SIZE
FES	-	FS	N.T.S.	SHEET 1 OF 1	A

D10100DA/12