This product, formerly sold by ams AG, and before that optionally by either Applied Sensors GmbH, acam-messelectronic GmbH or Cambridge CMOS Sensors, is now owned and sold by

ScioSense

The technical content of this document under ams / Applied Sensors / acam-messelectronic / Cambridge CMOS Sensors is still valid.

Contact information

Headquarters:

ScioSense B.V.

High Tech Campus 10

5656 AE Eindhoven

The Netherlands

info@sciosense.com

www.sciosense.com

acam
mess • electronic

Ultrasonic-Flow-Converter

Data Sheet

TDC-GP22

Universal 2-Channel Time-to-Digital Converters
Dedicated to Ultrasonic Heat & Water Meters

March 13th 2014
Document-No: DB_GP22_en V0.9

Published by acam-messelectronic gmbh
©acam-messelectronic gmbh 2014

Disclaimer / Notes

"Preliminary" product information describes a product which is not in full production so that full information about the product is not available yet. Therefore, acam-messelectronic gmbh ("acam") reserves the right to modify this product without notice. The information provided by this data sheet is believed to be accurate and reliable. However, no responsibility is assumed by acam for its use, nor for any infringements of patents or other rights of third parties that may result from its use. The information is subject to change without notice and is provided "as is" without warranty of any kind (expressed or implied). All other brand and product names in this document are trademarks or service marks of their respective owners.

Support / Contact

For a complete listing of Direct Sales, Distributor and Sales Representative contacts, visit the acam web site at:

http://www.acam.de/sales/distributors/

For technical support you can contact the acam support team in the headquarters in Germany or the Distributor in your country. The contact details of acam in Germany are:

support@acam.de or by phone +49-7244-74190.

Content

1 Overview 1-3
1.1 Features 1-3
1.2 Blockdiagram 1-4
1.3 Ordering Numbers 1-4
2 Characteristics & Specifications 2-1
2.1 Electrical Characteristics 2-1
2.2 Converter Specification 2-4
2.3 Timings 2-6
2.4 Pin Description 2-9
2.5 Package Drawings 2-11
2.6 Power Supply 2-14
3 Registers & Communication 3-1
3.1 Configuration registers 3-1
3.2 Read registers 3-14
3.3 EEPROM 3-18
3.4 SPI-interface 3-19
4 Converter Frontend 4-1
4.1 TDC - Measurement mode 1 4-1
4.2 TDC - Measurement mode 2 4-9
4.3 Analog Input Section 4-16
4.4 First Wave Mode 4-17
4.5 Temperature Measurement 4-23
5 Details and Special Functions 5-1
5.1 Oscillator 5-1
5.2 Fire Pulse Generator 5-3
5.3 Fast Initialization 5-7
5.4 Noise Unit 5-7
5.5 EMC Measures 5-8
6 Applications 6-1
6.1 Ultrasonic Heat Meter 6-1
7 Miscellaneous 7-1
7.1 Bug Report 7-1
7.2 Last Changes 7-2

1 Overview

TDC-GP22 is next generation's upgrade for TDC-GP21. It is a 100% pin-to-pin and functional compatible upgrade of TDC-GP21, with an extended functionality. Especially the new first-wave detection capability makes the TDC-GP22 perfectly suited for ultrasonic water meters with their high dynamics. The programmable offset range of the comparator is increased to ± 35 mV and the offset is automatically set back to zero after the first wave detection. Measuring the relative pulse width of the first wave gives the user an indication of the strength of the received signal. This can be used for adopting the system to long-term signal attenuation or for bubble detection. The multi-hit data processing and data read-out is simplified compared to TDC-GP21.

All in all, the TDC-GP22 is a further improvement and simplification for the design of ultrasonic heat meters and a necessary step for compact ultrasonic water meters.

1.1 Features

Measurement mode 2

- 1 channel with typ. 90 ps resolution
- Double resolution mode with 45 ps, Quad resolution mode with 22 ps resolution
- Measurement range 700 ns to 4 ms
- 3-fold multihit capability with automatic processing of all 3 data

Analog Input Circuit

- Chopper-stabilized low-offset comparator, programmable, ±35 mV
- First-wave detection: offset set zero automatically after first wave, hit selection relative to first wave
- First-wave pulse-width measurement for signal monitoring and bubble detection
- Integrated analog switches for input selection
- External circuit is reduced to 2 resistors and 2 capacitors

Temperature Measurement Unit

- 2 or 4 sensors, PT500/PT1000 or higher
- Schmitt trigger integrated
- 16-Bit eff. with external Schmitt trigger, 17.5-Bit eff. with integrated low noise Schmitt trigger
- Ultra low current (0.08 µA when measuring every 30 seconds)

Special Functions

- Fire pulse generator, up to 127 pulses
- Trigger to rising and/or falling edge
- Precise stop enable by windowing
- Low-power 32 kHz oscillator (500 nA)
- Clock calibration unit
- 7x32 Bit EEPROM

Measurement mode 1

- 2 channels with typ. 90 ps resolution
- channel double resolution with typ. 45 ps
- Range 3.5 ns (0 ns) to 2.5 µs
- 20 ns pulse-pair resolution, 4-fold multihit

- Up to 500 000 measurements per second in measurement mode 1

General

- 4-wire SPI interface
- 500 kHz continuous data rate max.
- I/O voltage 2.5 V to 3.6 V
- Core voltage 2.5 V to 3.6 V
- Temperature range – 40 °C to +125 °C
- QFN 32 Package

1.2 Blockdiagram

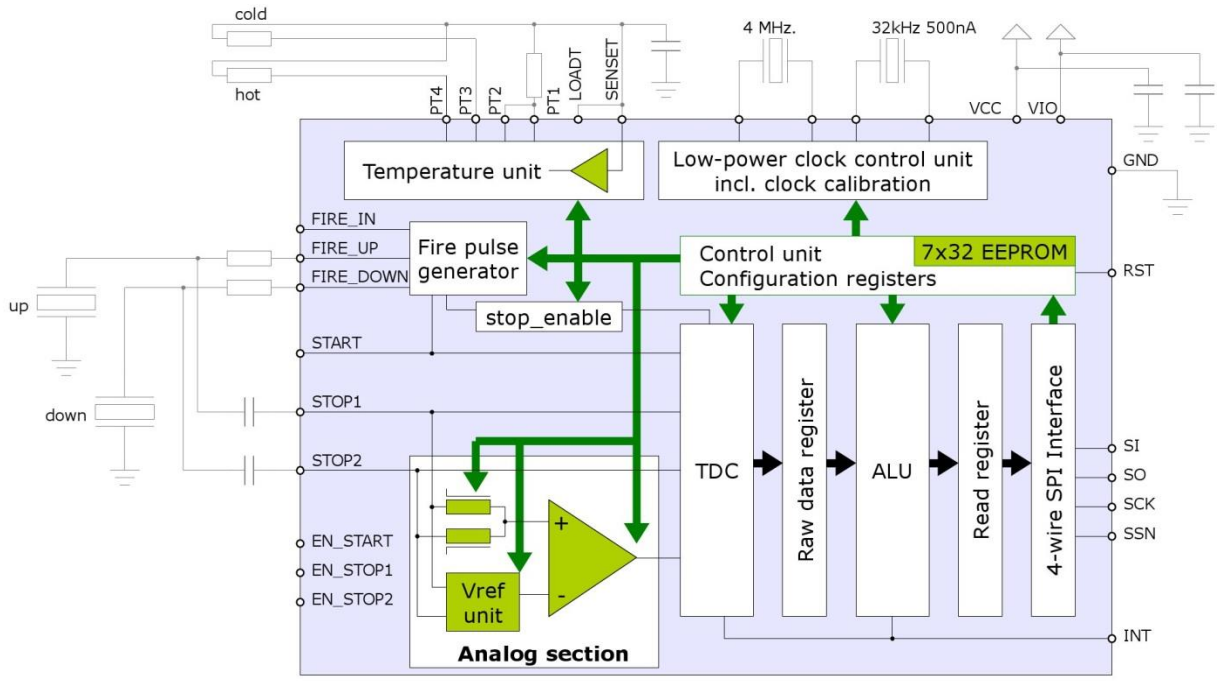

1.3 Ordering Numbers

Part#	Package	Package Qty; Carrier	Order number
TDC-GP22	QFN32	5000/3000; T&R	MNR 1950
TDC-GP22	QFN32	490; Tray	MNR 1949
GP22-EVA-KIT	System	1; Box	MNR 1951

This product is RoHS compliant and does not contain any Pb.

2 Characteristics & Specifications

2.1 Electrical Characteristics

Absolute Maximum Ratings

Supply voltage			
	V_{cc} vs. GND	- 0.3 to 4.0	V
	V_{io} vs. GND	- 0.3 to 4.0	V
	V_{in}	- 0.5 to V_{cc} + 0.5	V
Storage temperature (T_{stg})		- 55 to 150	°C
ESD rating (HBM), each pin		> 2	kV
Junction temperature (T_j)		max.125	°C

Recommended Operating Conditions

Symbol	Parameter	Conditions	Min	Typ	Max	Unit
V_{cc}	Core supply voltage[1]	V_{io} = V_{cc}	2.5		3.6	V
V_{io}	I/O supply voltage		2.5		3.6	V
t_{ri}	Normal input rising time				200	ns
t_{fa}	Normal input falling time				200	ns
t_{ri}	Schmitt trigger rising time				5	ms
t_{fa}	Schmitt trigger falling time				5	ms
T_a	Ambient temperature	T_j must not exceed 125°C	-40		125	°C
$R_{th(j-a)}$	Thermal resistance	junction-ambient		28		K/W

[1] including the oscillator pins XIN, XOUT, Clk32In, Clk32Out

DC Characteristics (V_{io} = V_{cc} = 3.0 V, T_j = -40 to +85°C)

Symbol	Parameter	Conditions	Min	Typ	Max	Unit
I_{32}	Current 32 kHz	I_{cc} + I_{io}, only 32 kHz oscillator running		1.0		µA
I_{hs}	Current 4 MHz oscillator	V_{cc} = V_{io} = 3.6 V = 3.0 V off		200 130 < 1		µA µA nA
I_{tmu}	Current time measuring unit	only during active time measurement		4		mA
I_{ddq}	Quiescent current	all clocks off, @ 85 °C		< 0.1		µA
I_o	Operating current	TOF_UP/DOWN, 1/s Temperature average, PT1000, 1/30s		1.1 0.15		µA
V_{oh}	High level output voltage	I_{oh}= tbd mA V_{io}=Min.	0.8V_{io}			V
V_{ol}	Low level output voltage	I_{ol} = tbd mA, V_{io}=Min			0.2V_{io}	V
V_{ih}	High level input voltage	LVTTL Level, V_{io} = Max.	0.7V_{io}			V
V_{il}	Low level input voltage	LVTTL Level, V_{io} = Min.			0.3V_{io}	V
V_{th}	High level Schmitt trigger voltage		0.7Vio			V
V_{tl}	Low level Schmitt trigger voltage				0.3V_{io}	V
V_h	Schmitt trigger hysteresis			0.28		V

Terminal Capacitance

Symbol	Terminal	Condition	Rated Value			Unit
			Min.	Typ.	Max.	
C_i	Digital input	measured @ V_{cc} = V_{io}, f = 1 MHz, T_a = 25°C		7		pF
C_o	Digital output					
C_{io}	Bidirectional			9		
	PT ports			t.b.d.		
	Analog in			t.b.d.		

Analog Frontend

Symbol	Terminal	Condition	Rated Value			Unit
			Min.	Typ.	Max.	
	Comparator input offset voltage (chopper stabilized)			< 1	2	mV
$R_{dson(AS)}$	Switch-on resistance of analog switches at STOP1/STOP2 inputs			200		Ohm
$R_{dson(FIRE)}$	Switch-on resistance of FIRE_UP, FIRE_DOWN output buffers	Symmetrical outputs, Rdson(HIGH) = Rdson(LOW)		4		Ohm
I_{fire}	Output current FIRE_UP, FIRE_DOWN output buffers			48		mA

EEPROM

Symbol	Terminal	Condition	Minimum Value	Unit
	Data retention @ 85°C	normal	10	years
		with Error correction	practically endless	

2.2 Converter Specification

Time Measuring Unit (V_{io} = V_{cc} = 3.0 V, T_j = 25°C)

Symbol	Terminal	Condition	Rated Value			Unit
			Min.	Typ.	Max.	
LSB	Resolution (BIN-Size)	Measurement mode 1 & 2: DOUBLE_RES = 0 DOUBLE_RES = 1		 90 45		ps
		Measurement mode 2: QUAD_RES = 1		 22		ps
	Standard deviation Measurement Mode 1	DOUBLE_RES = 0 Delay = 200ns Delay = 1µs DOUBLE_RES = 1 Delay = 200ns		 45 72 35		ps
	Standard deviation Measurement Mode 2	DOUBLE_RES = 0 Delay = 2µs Delay = 100µs DOUBLE_RES = 1 Delay = 2µs Delay = 100µs QUAD_RES = 1 Delay = 2µs Delay = 100µs		 54 70 50 62 39 62		ps
t_m	Measurement range	Measurement mode 1	3.5 ns		2.4 µs =26224 *LSB	
		Measurement mode 2	700 ns		4 ms	
INL	Integral Non-linearity			< 0.1		LSB
DNL	Differential Non-linearity			< 0.8		LSB

Figure 2-1 Relative Variation of un-calibrated least significant bit with temperature and supply voltage, reference 3.0V/25°C

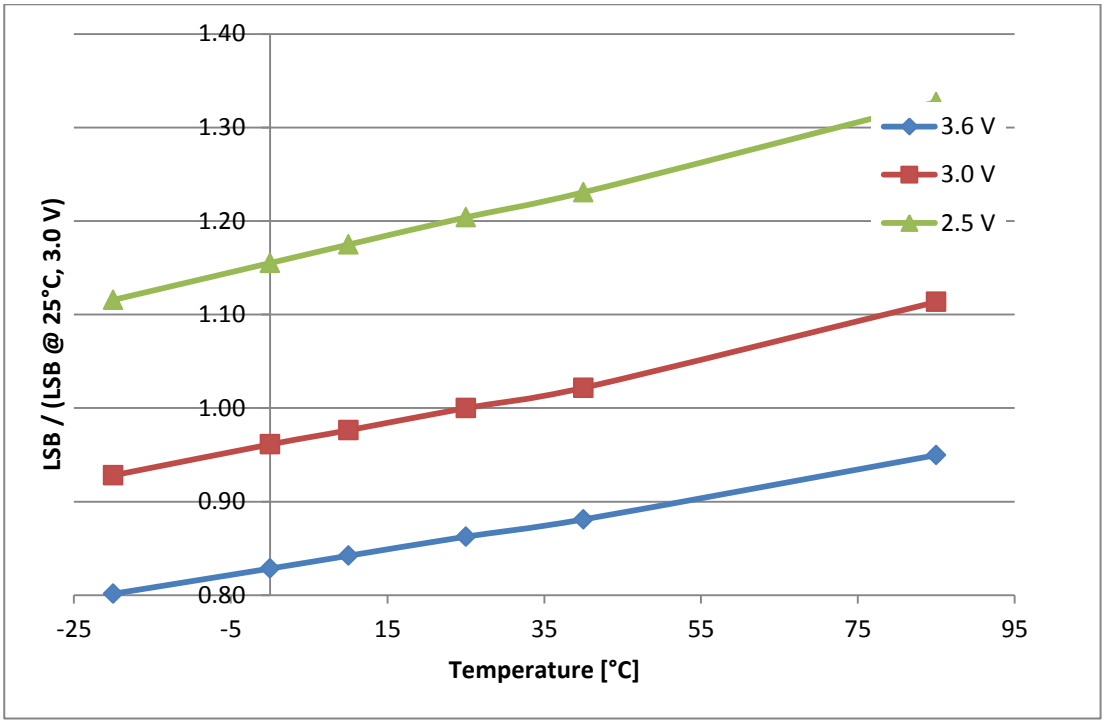

Temperature Measuring Unit[1]

Symbol	Terminal		Internal Schmitt trigger		external Schmitt trigger[2]		Unit
			PT500	PT1000	PT500	PT1000	
	Resolution RMS		17.5	17.5	16.0	16.0	Bit
	SNR		105	105	96	96	dB
	Absolute Gain[3]		0.9912	0.9931	0.9960	0.9979	
		3.6 V	0.9923	0.9940	0.9962	0.9980	
	Absolute Gain vs. V_{io}[3]	3.0 V	0.9912	0.9931	0.9960	0.9979	
		2.5 V	0.9895	0.9915	0.9956	0.9979	
	Gain-Drift vs. V_{io}		0,25	0.23	0.06	0.04	%/V

	max. Gain Error (@ dΘ = 100 K)	0,05%	0,05%	0,02%	< 0.01%	
	Gain-Drift vs. Temp	0.022	0.017	0.012	0.0082	%/10 K
	Gain-Drift vs. Vio			0,08		%/V
	Initial Zero Offset	< 20	<10	< 20	< 10	mK
	Offset Drift vs. Temp	< 0.05	< 0.03	< 0,012	< 0.0082	mK/ °C
	PSRR			>100		dB

[1] All values measured at Vio = Vcc = 3.0 V, Cload = 100 nF for PT1000 and 200 nF for PT500 (COG-type)
[2] measured with external 74AHC14 Schmitt trigger
[3] compared to an ideal gain of 1

2.3 Timings

At Vcc = 3.0 V ± 0.3 V, ambient temperature -40 °C to +85 °C unless otherwise specified

Oscillator

Symbol	Parameter	Min.	Typ.	Max.	Unit
Clk32	32 kHz reference oscillator		32,768		kHz
t_{32st}	32 kHz oscillator start-up time after power-up		250		ms
ClkHS	High-speed reference oscillator	2	4	8	MHz
t_{oszst}	Oscillator start-up time with ceramic resonator		100		µs
t_{oszst}	Oscillator start-up time with crystal oscillator		3		ms

Note:

It is strongly recommended to use a ceramic oscillator. Exactly because a quartz needs much longer to settle than a ceramic oscillator. This costs a lot current, but using a quartz oscillator has no advantage.

Serial Interface

Symbol	Parameter	Max. @ V_{io} =		Unit
		2.5 V	3.3 V	
f_{clk}	Serial clock frequency	15	20	MHz

Symbol	Parameter	Min. @ V_{io} =		Unit
		2.5 V	3.3 V	
t_{pwh}	Serial clock, pulse width high	30	25	ns
t_{pwl}	Serial clock, pulse width low	30	25	ns
t_{sussn}	SSN enable to valid latch clock	40	10	ns
t_{pwssn}	SSN pulse width between write cycles	50	40	ns
t_{hssn}	SSN hold time after SCLK falling	40	25	ns
t_{sud}	Data set-up time prior to SCLK falling	5	5	ns
t_{hd}	Data hold time before SCLK falling	5	5	ns

Symbol	Parameter	Max. @ V_{io} =		Unit
		2.5 V	3.3 V	
t_{vd}	Data valid after SCLK rising	20	16	ns

Serial Interface (SPI compatible, Clock Phase Bit =1, Clock Polarity Bit =0):

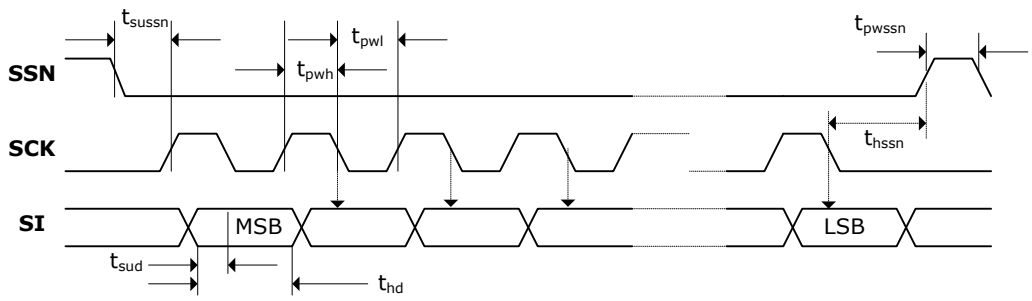

Figure 2-2 SPI Write

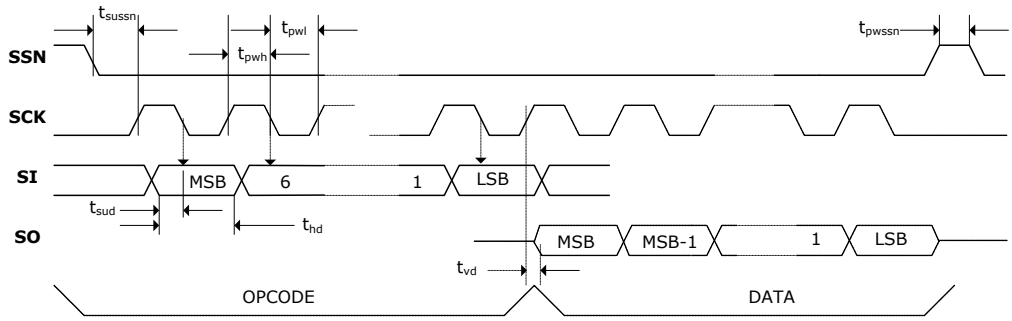

Figure 2-3 SPI Read

Disable Timings

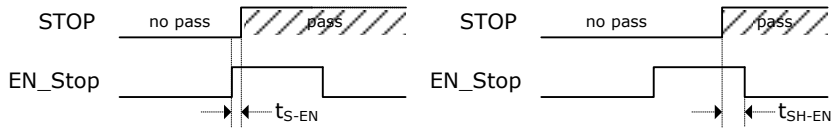

Figure 2-4 Disable Timings

Spec	Description	Measurement mode 1	Measurement mode 2
$t_{S\text{-}EN}$	Enable Setup Time	0 ns	0 ns
$t_{SH\text{-}EN}$	Enable Hold Time	1.5 ns	3.0 ns

Reset Timings

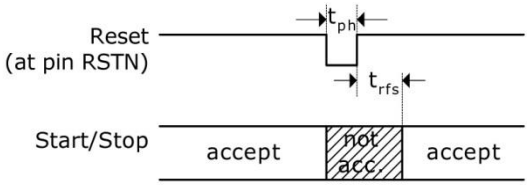

Figure 2-5 Reset Timings

Spec	Description	Typ. Min
t_{ph}	Reset pulse width	50 ns
t_{rfs}	Time after rising edge of reset pulse before further communication	200 ns
	Time after rising edge of reset pulse before analog section is ready	500 µs

2.4 Pin Description

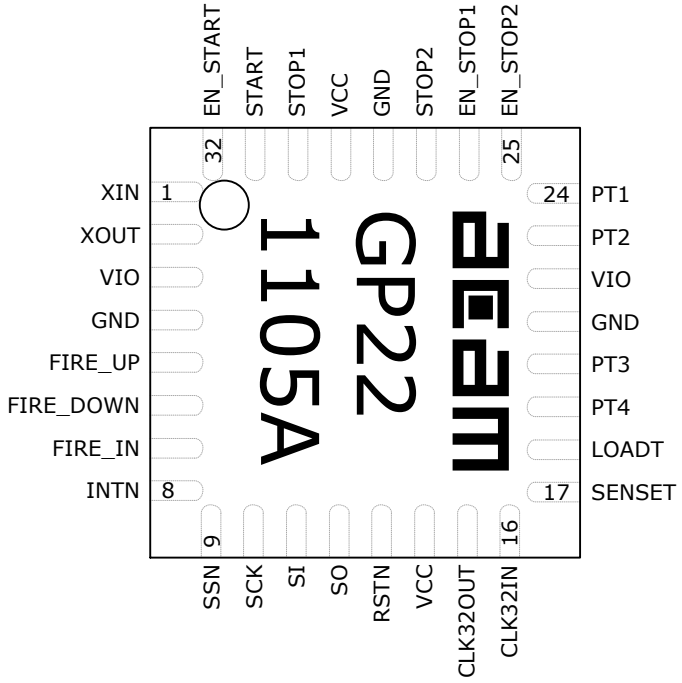

Figure 2-6 TDC-GP22 Pinout

No.	Name	Description	Buffer type	Value	If not used
1	XIN	Oscillator driver in			GND
2	XOUT	Oscillator driver out			
3	VIO	I/O – supply voltage			
4	GND	Ground			
5	FIRE_UP	Fire pulse generator output 1	48 mA		
6	FIRE_DOWN	Fire pulse generator output 2	48 mA		
7	FIRE_IN	Diagnostics output			GND
8	INTN	Interrupt flag	4 mA	LOW active	
9	SSN	Slave select		LOW active	
10	SCK	Clock serial interface			
11	SI	Data input serial interface			

No.	Name	Description	Buffer type	Value	If not used
12	SO	Data output serial interface	4 mA tristate		
13	RSTN	Reset input		LOW active	
14	VCC	Core supply voltage			
15	CLK32OUT	Output 32 kHz clock generator			n. c.
16	CLK32IN	Input 32 kHz clock generator			GND
17	SENSET	Sense input temperature measurement	Schmitt trigger		GND
18	LOADT	Load output temperature measurement	24 mA		n.c.
19	PT4*	Port 4 temperature measurement	> 96 mA open drain		
20	PT3*	Port 3 temperature measurement	> 96 mA open drain		
21	GND	Ground			
22	VIO	I/O – supply voltage			
23	PT2*	Port 2 temperature measurement	> 96 mA open drain		
24	PT1*	Port 1 temperature measurement	> 96 mA open drain		
25	EN_STOP2	Enable pin stop input 2		HIGH active	VIO
26	EN_STOP1	Enable pin stop input 1		HIGH active	VIO
27	STOP2	Stop input 2			GND
28	GND	Ground			
29	VCC	Core supply voltage			
30	STOP1	Stop input 1			GND
31	START	Start input			
32	EN_START	Enable pin start input		HIGH active	VIO

* R_{DSON} temperature ports: typ. 1.8 Ω @ 3.0 V

2.5 Package Drawings

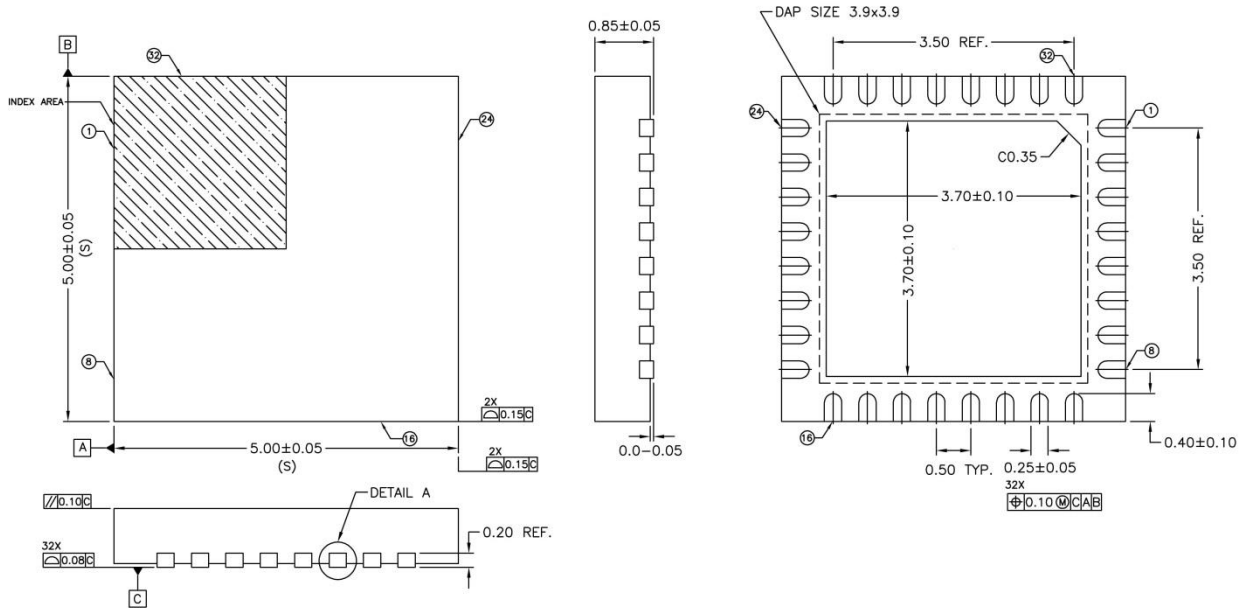

Figure 2-7 QFN-32 package outline, 5 x 5 x 0.9 mm³, 0.5 mm lead pitch

Caution: Center pad, 3.70 * 3.70 mm², is internally connected to GND. No wires other than GND are allowed underneath. It is not necessary to connect the center pad to GND.

Suitable socket: Plastronics 32QN50S15050D

Landing Pattern:

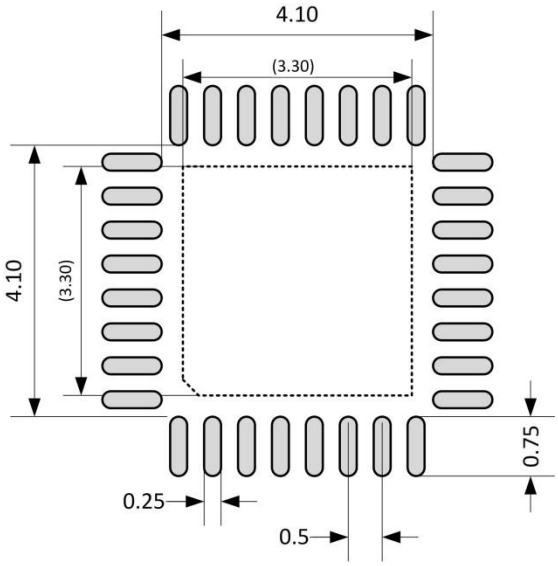

Figure 2-8

Thermal resistance: Roughly 28 K/W (value just for reference).

Environmental: The package is RoHS compliant and does not contain any Pb.

Moisture Sensitive Level (MSL)

Based on JEDEC 020 Moisture Sensitivity Level definition the TDC-GP22 is classified as MSL 1.

Soldering Temperature Profile

The temperature profile for infrared reflow furnace (in which the temperature is the resin's surface temperature) should be maintained within the range described below.

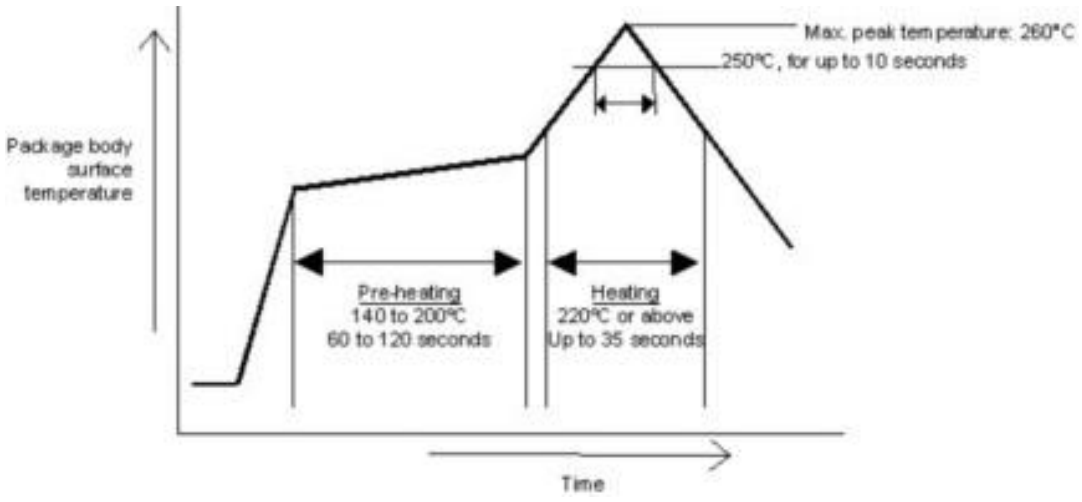

Figure 2-9 Soldering profile

Maximum temperature

The maximum temperature requirement for the resin surface, given 260°C as the peak temperature of the package body's surface, is that the resin surface temperature must not exceed 250°C for more than 10 seconds. This temperature should be kept as low as possible to reduce the load caused by thermal stress on the package, which is why soldering for short periods only is recommended. In addition to using a suitable temperature profile, we also recommend that you check carefully to confirm good soldering results.

Date Code: YYWWA: YY = Year, WW = week, A = Assembly site code

2.6 Power Supply

Supply voltage

TDC-GP22 is a high end mixed analog/digital device. To reach full performance of the chip a good power supply is mandatory. It should be high capacitive and of low inductance.

The TDC-GP22 provides two pairs of power supply terminals:

Vio - I/O supply voltage

Vcc - Core supply voltage

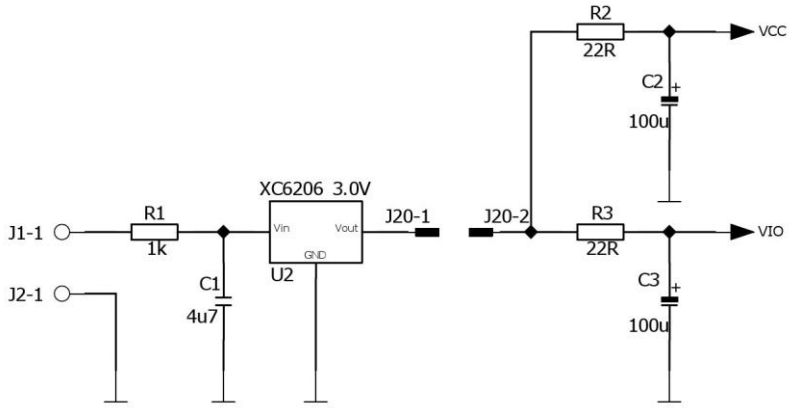

Figure 2-10

Both voltages should be applied with low series resistance from the same source. On the chip there are connected, but a separate external connection is recommended for good measurement quality. All ground pins should be connected to a ground plane on the

printed circuit board. Vio and Vcc should be provided by a battery or fixed linear voltage regulator. Do not use switched regulators to avoid disturbances caused by the I/O supply.

Vio and Vcc are connected internally on the chip. The resistance between both is in the range of several Ohms. However, Vio is connected to the pads with significantly lower impedance and therefore can provide this better than Vcc.

The measurement quality of a time-to-digital converter depends on a good power supply. The chip sees mainly pulsed current and therefore a sufficient bypassing is mandatory:

Vcc	47 to 100 µF	(minimum 22 µF)
Vio	100 µF	(minimum 22 µF)

The supply voltage should be provided through analog regulators. We strongly recommend not to use switch mode power supplies.

Current consumption

The current consumption is the sum from different parties (all data for Vio = Vcc = 3.0V):

I_{ddq}	< 5 nA typ.@3.0V, 25°C	Quiescent current, no 32 kHz oscillator running
I_{32}	typ. 1.0 µA	Standby current with active 32 kHz oscillator (GP22 waiting for command).
I_{hs}	typ. 130 µA/s * (active runtime)	Current into the high speed oscillator at 3.0 V Vio. Example: In ultrasonic flow-meters the high-speed oscillator is on for about 2ms only. The average current consumption is 130 µA/s * 2 ms = 0.26 µA
I_{tmu}	typ. 4 mA/s * (active measuring time)	Current into the time measuring unit, In measurement mode 1 The time measuring unit is active for the start-stop time interval plus the calibration time interval of 2 periods of the reference clock per measurement. In measurement mode 2 the time measuring unit is on for average 4 periods of the reference clock per measurement, two for the time measurement and two for calibration. Example: With 10 measurements per second in measurement mode 2 and a 4 MHz reference clock the time measuring unit is active for

		only about 10 µs. The average current is 4 mA/s * 10 µs = 0.040 µA.
I_T	typ. 2.5 µAs * measure rate	The current for a full temperature measurement is typ.2.5µAs. In heat-meters the temperature is measured typically once every 30 seconds. The average current is about 0.085 µA
I_{ana}	typ. 0.8 mA	Current consumption of the integrated analog part of TDC-GP22 during a Time-of-flight (ToF) measurement. The analog part is active for a duration of 250 µs + ToF.
I_{total}	2.3 µA	In a typical ultrasonic heat meter application, the flow is measured twice per second. The temperature is measured every 30 seconds. Typical current consumption of the complete flow and temperature measuring unit, including the analog part, the transducers and PT sensors.

3 Registers & Communication

3.1 Configuration registers

The TDC-GP22 has 7 configuration registers with 32 bit. The upper 24 bit are used for configuration and are write only. They are used to setup the TDC-GP22 operating mode. The lowest 8 bit can be used e.g. as an ID and can be read back.

For communication test please write to register 1 and read back the highest 8 bit from address 5.

Note:

The write registers of TDC-GP22 are fully upwards compatible with TDC-GP21. In addition, the formerly unused bits 30, 31 in register 3 activate new functionality. Especially with bit 30 the First Wave Mode is switched on and the parameter bits DELVAL2 and DELVAL3 in registers 3 and 4 get a second meaning.

For proper work of TDC-GP22, a power-up reset via pin or SPI command is necessary after the power-up of the circuit.

3.1.1 Alphanumeric listing of configuration parameters

Table 3-1: Configuration Parameters

Parameter	Register	Bits	Default value
ANZ_FAKE	0	15	0
ANZ_FIRE [3:0] [6:4]	0 6	28-31 8-10	2
ANZ_PER_CALRES	0	22,23	0
ANZ_PORT	0	17	1
CALIBRATE	0	13	1
CON_FIRE	5	28-31	0
CURR32K	1	15	0
CYCLE_TEMP	6	18,19	0
CYCLE_TOF	6	16,17	0
DA_KORR	6	25-28	0
DELREL1	3	8-13	0

Parameter	Register	Bits	Default value
DELREL2	3	14-19	0
DELREL3	3	20-25	0
DELVAL1	2	8-23	0
DELVAL2	3	8-23	0
DELVAL3	4	8-23	0
DIS_PHASESHIFT	5	27	0
DIS_PW	4	16	0
DIV_CLKHS	0	20,21	0
DIV_FIRE	0	24-27	2
DOUBLE_RES	6	12	0
EDGE_FW	4	15	0
EN_ANALOG	6	31	0
EN_AUTOCALC_MB2	3	31	0
EN_ERR_VAL	3	29	0
EN_FAST_INIT	1	23	0
EN_FIRST_WAVE	3	30	0
EN_INT [2:0] [3]	2 6	29-31 21	1
EN_STARTNOISE	5	28	0
FIRE0_DEF	6	14	0
HIT1	1	24-27	5
HIT2	1	28-31	5
HITIN1	1	16-18	0
HITIN2	1	19-21	0
HZ60	6	15	0
ID0	0	0-7	0
ID1	1	0-7	0
ID2	2	0-7	0
ID3	3	0-7	0
ID4	4	0-7	0
ID5	5	0-7	0

Parameter	Register	Bits	Default value
ID6	6	0-7	0
MESSB2	0	11	1
NEG_START	0	8	0
NEG_STOP_TEMP	6	30	0
NEG_STOP1	0	9	0
NEG_STOP2	0	10	0
NO_CAL_AUTO	0	12	0
OFFS	4	8-12	0
OFFSRNG1	4	13	0
OFFSRNG2	4	14	0
PHFIRE	5	8-23	0
QUAD_RES	6	13	0
REPEAT_FIRE	5	24-26	0
RFEDGE1	2	27	0
RFEDGE2	2	28	0
SEL_ECLK_TMP	0	14	1
SEL_START_FIRE	1	14	0
SEL_TIM0_MB2	3	27,28	3
SEL_TST01	1	8-10	0
SEL_TST02	1	11-13	0
START_CLKHS [1:0] [2]	0 6	18,19 20	1
TCYCLE	0	16	0
TEMP_PORTDIR	6	11	0
TW2	6	22,23	0

3.1.2 List of configuration registers

Bit number →	15	14	13	12	11	10	9	8	7	6	5	4	3	2	1	0
Parameter →			param1				k.d.									
Default value →							1	1	0	0	1	0	1	0	1	0

k.d. = keep default values

Register 0 (address 0):

31	30	29	28	27	26	25	24	23	22	21	20	19	18	17	16	15	14	13	12	11	10	9	8	7-0
ANZ_FIRE[3:0]				DIV_FIRE																				IDO
0	0	1	0	0	0	1	0	0	0	0	0	0	1	1	0	0	1	1	0	1	0	0	0	0

ANZ_PER_CALRES, DIV_CLKHS, START_CLKHS[1:0], ANZ_PORT, TCYCLE, ANZ_FAKE, SEL_ECLK_TEMP, CALIBRATE, NO_CAL_AUTO, MESSB2, NEG_STOP2, NEG_STOP1, NEG_START

Parameter	Description	Settings
ANZ_FIRE[3:0]	Sets number of pulses generated by fire pulse generator. Additional 3 bits are set in register 6. For values ANZ_FIRE > 15 the phase setting (PHFIRE) can not be used.	0 = off 1 = 1 pulse 2 = 2 pulses … 127 = 127 pulses
DIV_FIRE	Sets predivider for internal clock signal of fire pulse generator	0 = not permitted 1 = divided by 2 2 = divided by 3 3.= divided by 4 … 15 = divided by 16
ANZ_PER_CALRES	Sets number of periods used for calibrating the ceramic resonator	0 = 2 periods = 61.035 µs 1 = 4 periods = 122.07 µs 2 = 8 periods = 244.14 µs 3 = 16 periods = 488.281 µs
DIV_CLKHS	Sets predivider for CLKHS	0 = divided by 1 1 = divided by 2 2 = divided by 4 3 = divided by 4 (also)
START_CLKHS[1:0]	Defines the time interval the chip waits after switching on the oscillator before making a measurement. Note: The highest bit to adjust START_CLKS is located in register 6, bit 20. This has to be set to 1 for settling times of 2.44 ms and	0 = Oscillator off 1 = Oscillator continuously on 2 = settling time 480 µs 3 = settling time 1.46 ms 4 = settling time 2.44 ms 5 to 7 = settling time 5.14 ms

	5.14 ms.	
ANZ_PORT	Sets number of ports used for temperature measurement	0 = 2 temperature ports (PT1 and PT2) 1 = 4 temperature ports
TCYCLE	Sets cycle time for temperature measurement	0 = 128 µs cycle time @ 4 MHz 1 = 512 µs cycle time @ 4 MHz (recommended)
ANZ_FAKE	Number of dummy cycles at the beginning of a temperature measurement	0 = 2 Fake measurements 1 = 7 Fake measurements
SEL_ECLK_TMP	Select reference signal for internal cycle clock for temperature measurement	0 = use 32.768 kHz as cycle clock 1 = use 128 * CLKHS as period for cycle clock (32 µs with 4 MHz high speed clock signal)
CALIBRATE	Enables/disables calibration calculation in the ALU	0 = calculation of calibrated results off (allowed only in measurement mode 1) 1 = calculation of calibrated results on (recommended)
NO_CAL_AUTO	Enables/disables auto-calibration run in the TDC	0 = auto-calibration after measurement 1 = auto-calibration disabled
MESSB2	Switch to measurement mode 2	0 = measurement mode 1 1 = measurement mode 2
NEG_STOP2	Negation stop 2 input	0 = non-inverted input signal – rising edge 1 = inverted input signal – falling edge
NEG_STOP1	Negation stop 1 input	0 = non-inverted input signal – rising edge 1 = inverted input signal – falling edge
NEG_START	Negation start input	0 = non-inverted input signal – rising edge 1 = inverted input signal – falling edge
IDO	Free bits, e.g. to be used as identification or version number	

Register 1 (address 1):

31	30	29	28	27	26	25	24	23	22	21	20	19	18	17	16	15	14	13	12	11	10	9	8	7-0
HIT2				HIT1						HITIN2			HITIN1					SEL_TSTO2			SEL_TSTO1			ID1
0	1	0	1	0	1	0	1	0	1	0	0	0	0	0	0	0	0	0	0	0	0	0	0	0

EN_FAST_INIT
k.d.
CURR32K
SEL_START_FIRE

Parameter	Description	Settings	
HIT2	Defines operator for ALU data post-processing Measurement mode 1: HIT1-HIT2 Measurement mode 2: HIT2-HIT1	Measurement mode 1: 0 = Start 1 = 1. Stop Ch1 2 = 2. Stop Ch1 3 = 3. Stop Ch1 4 = 4. Stop Ch1 5 = no action 6 = Cal1 Ch1 7 = Cal2 Ch1 9 = 1. Stop Ch2 A = 2. Stop Ch2 B = 3. Stop Ch2 C = 4. Stop Ch2	Measurement mode 2: 2 = 1. Stop Ch1 3 = 2. Stop Ch1 4 = 3. Stop Ch1
HIT1	Defines operator for ALU data post-processing Measurement mode 1: HIT1-HIT2 Measurement mode 2: HIT2-HIT1	Measurement mode 1: 0 = Start 1 = 1. Stop Ch1 2 = 2. Stop Ch1 3 = 3. Stop Ch1 4 = 4. Stop Ch1 5 = no action 6 = Cal1 Ch1 7 = Cal2 Ch1 9 = 1. Stop Ch2 A = 2. Stop Ch2 B = 3. Stop Ch2 C = 4. Stop Ch2	Measurement mode 2: 1 = Start
EN_FAST_INIT	Enables fast init operation	0 = Fast init mode disabled 1 = Fast init mode enabled	
HITIN2	Number of expected hits on channel 2	0 = stop channel 2 disabled 1 = 1 hit 2 = 2 hits 3 = 3 hits 4 = 4 hits 5 to 7 = not permitted	
HITIN1	Number of expected hits on channel 1	0 = stop channel 1 disabled 1 = 1 hit	

		2 = 2 hits 3 = 3 hits 4 = 4 hits 5 to 7 = not permitted
CURR32K	Low current option for 32 kHz oscillator. Basically there is no need to use high current option (1). Low current (0) also guarantees oscillation.	0 = low current (recommended) 1 = high current (GP2 compatibility)
SEL_START_FIRE	Fire pulse is used as TDC start. The START input is disabled.	0 = TDC-GP2 behavior 1 = Use FIRE as Start
SEL_TST02	Defines functionality of EN_START pin. Besides the GP2 functionality this pin can act as output for various signals. If SEL_TST02 > 0 then EN_START = HIGH internally.	0 = GP2 functionality, High level enables the START pin. 1 = START_TDC output 2 = STOP1 TDC output 3 = STOP2 TDC output 4 = Stop Temperature measurement output 5 = "0" indicates TOF_DOWN being active, "1" indicates TOF_UP being active 6 = n.c. 7 = 4 kHz (32 kHz/8) clock
SEL_TST01	Defines functionality of FIRE_IN pin. Besides the GP2 functionality this pin can act as output for various signals. If SEL_TST01 >1 the FIRE_IN is connected to GND internally.	0 = GP2 functionality, FIRE_IN input for sing-around 1 = START_TDC output 2 = STOP1 TDC output 3 = STOP2 TDC output 4 = Start Temperature measurement output 5 = EN_STOP by DELVAL output 6 = Comparator out 7 = 32 kHz clock
ID1	Free bits, e.g. to be used as identification or version number	

Register 2 (address 2):

31	30	29	28	27	26	25	24	23	22	21	20	19	18	17	16	15	14	13	12	11	10	9	8	7-0
EN_INT[2:0]					DELVAL1																			ID2
0	0	1	0	0	0	0	0	0	0	0	0	0	0	0	0	0	0	0	0	0	0	0	0	0

RFEDGE2
RFEDGE1

Parameter	Description	Settings
EN_INT[2:0]	Activates interrupt sources wired by OR. Additional bit in register 6 (see there, too)	Bit 31 = Timeout interrupt enable Bit 30 = End Hits interrupt enable Bit 29 = ALU interrupt enable Reg6, BIT21 = End of EEPROM action
RFEDGE2	Edge sensitivity channel 2	0 = rising or falling edge 1 = rising and falling edge
RFEDGE1	Edge sensitivity channel 1	0 = rising or falling edge 1 = rising and falling edge
DELVAL1	Delay value for internal stop enable unit, hit 1 channel 1. Fixed point number with 14 integer and 5 fractional digits in multiples of T_{ref}	DELVAL1 = 0 to 16383.96875 Mandatory: If EN_ANALOG = 0 then set DELVAL1 = 0
ID2	Free bits, e.g. to be used as identification or version number	

Register 3 (address 3) with EN_FIRST_WAVE = 0:

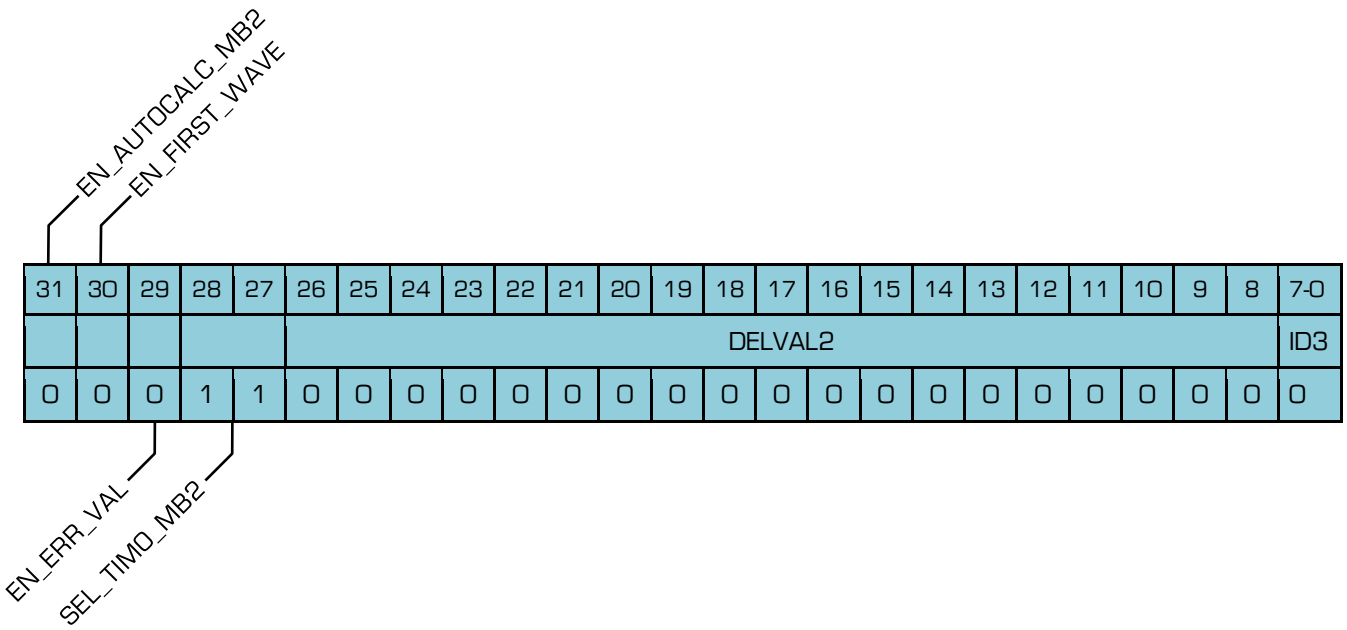

Register 3 (address 3) with EN_FIRST_WAVE = 1:

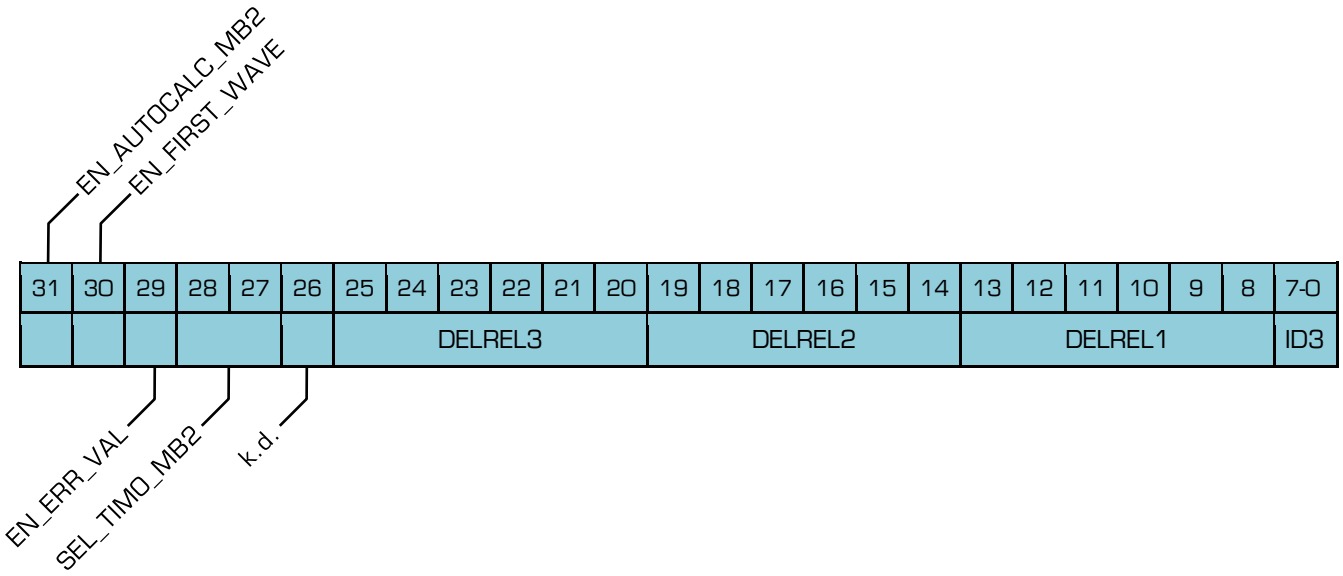

Parameter	Description	Settings
EN_AUTOCALC_MB2	Only in measurement mode 2: automatic calculation of all enabled hits. The sum of the results is written to read register 4.	0 = disabled 1 = enabled
EN_ERR_VAL	Timeout forces ALU to write 'hFFFFFFFF into the output register	0 = disabled 1 = enabled
EN_FIRST_WAVE	Enables the automatic first hit detection. In case this bit is set registers 3 and 4 get a new meaning	0 = disabled 1 = enabled
SEL_TIMO_MB2	Select predivider for timeout in measurement mode 2	0 = 64 µs 1 = 256 µs 2 = 1024 µs 3 = 4096 µs recommended @ 4 MHz ClkHS
DELREL3	Sets the number of the periods after the first hit for the 3rd stop	5 to 63 DELREL3 > DELREL2
DELREL2	Sets the number of the periods after the first hit for the 2nd stop	4 to 63 DELREL2 > DELREL1
DELREL1	Sets the number of the periods after the first hit for the 1st stop	3 to 63
DELVAL2	Delay value for internal stop enable unit, hit 2 channel 1. Fixed point number with 14 integer and 5 fractional digits in multiples of T_{ref}	DELVAL2 = 0 to 16383.96875 Mandatory: If EN_ANALOG = 0 then set DELVAL2 = 0
ID3	Free bits, e.g. to be used as identification or version number	

Register 4 (address 4) with EN_FIRST_WAVE = 0:

31	30	29	28	27	26	25	24	23	22	21	20	19	18	17	16	15	14	13	12	11	10	9	8	7-0
k.d.					DELVAL3																			ID4
0	0	1	0	0	0	0	0	0	0	0	0	0	0	0	0	0	0	0	0	0	0	0	0	0

Register 4 (address 4) with EN_FIRST_WAVE = 1:

31	30	29	28	27	26	25	24	23	22	21	20	19	18	17	16	15	14	13	12	11	10	9	8	7-0
k.d.																			OFFS					ID4

DIS_PW
EDGE_FW
OFFSRNG2
OFFSRNG1

Parameter	Description	Settings
DELVAL3	Delay value for internal stop enable unit, hit 3 channel 1. Fixed point number with 14 integer and 5 fractional digits in multiples of T_{ref}	DELVAL3 = 0 to 16383.96875 Mandatory: If EN_ANALOG = 0 then set DELVAL3 = 0
DIS_PW	Disable pulse width measurement	0 = Enable pulse width measurement 1 = Disable pulse width measurement
EDGE_FW	Sets the edge sensitivity for the first wave. With a negative offset it is reasonable to trigger on the falling edge of the first wave.	0 = rising edge 1 = falling edge
OFFSRNG2	Additional offset shift by + 20 mV	0 = off 1 = active
OFFSRNG1	Additional offset shift by - 20 mV	0 = off 1 = active
OFFS	2's complement number setting the offset shift in 1 mV steps	0 = 0 mV 1 = +1 mV ... 15 = +15 mV 16 = -16 mV 17 = -15 mV ... 30 = -2 mV 31 = -1 mV
ID4	Free bits, e.g. to be used as identification or version number	

Note: When switching to First Wave Mode make sure that the highest 5 bits have the default values. Especially bit 29 has to be 1.

Register 5 (address 5):

31	30	29	28	27	26	25	24	23	22	21	20	19	18	17	16	15	14	13	12	11	10	9	8	7-0
								PHFIRE																ID5
0	0	0	0	0	0	0	0	0	0	0	0	0	0	0	0	0	0	0	0	0	0	0	0	0

CON_FIRE
EN_STARTNOISE
DIS_PHASESHIFT
REPEAT_FIRE

Parameter	Description	Settings
CONF_FIRE	Output configuration for pulse generator 3'b 011 is not allowed	Bit 31 = 1: FIRE_BOTH (inverts FIRE_DOWN) Bit 30 = 1: enable output FIRE_UP Bit 29 = 1: enable output FIRE_DOWN
EN_STARTNOISE	Enables additional noise for start channel	1 = switch on noise unit
DIS_PHASESHIFT	Phase noise unit. Improves statistics and should be enabled if start pulse generation is derived from the GP2 reference clock (e.g. with fire pulse generator).	1 = disables phase noise 0 = enables phase noise unit
REPEAT_FIRE	Number of pulse sequence repetition for "quasi-sing-around"	0 = no signal repetition 1 = 1 signal repetition 2 = 2 signal repetition … 7 = 7 signal repetition
PHFIRE	Enables phase reversing for each pulse of a sequence of up to 15 possible pulses. PHFIRE[0..14] are available.	0 = no inversion, phase jump HIGH-LOW 1 = inversion, phase jump LOW-HIGH Bit 23 = 0 (mandatory)
ID5	Free bits, e.g. to be used as identification or version number	

Register 6 (address 6):

31	30	29	28	27	26	25	24	23	22	21	20	19	18	17	16	15	14	13	12	11	10	9	8	7-0
																								ID6
0	0	0	0	0	0	0	0	0	0	0	0	0	0	0	0	0	0	0	0	0	0	0	0	0

EN_ANALOG, NEG_STOP_TEMP, DA_KORR, TW2, EN_INT[3], START_CLKHS[2], CYCLE_TEMP, CYCLE_TOF, HZ60, FIREO_DEF, QUAD_RES, DOUBLE_RES, TEMP_PORTDIR, ANZ_FIRE[6:4]

Parameter	Description	Settings
EN_ANALOG	Activates the analog part for the ultrasonic flow measurement is. If active, this section is powered only for the duration of the measurement to save current. STOP1 and STOP2 are analog inputs now and automatically selected by the internal multiplexer.	0 = STOP1 and STOP2 are digital inputs (TDC-GP2 compatibility) 1 = The analog section is used. Mandatory: If EN_ANALOG = 0 then set DELVAL1 = DELVAL2 = DELVAL3 = 0
NEG_STOP_TEMP	Inverts the SenseT input signal. This is mandatory when the internal comparator is used instead of the external one like in TDC-GP2	0 = external 74HC14 is used (TDC-GP2 compatibility) 1 = internal Schmitt trigger is used
DA_KORR	Sets comparator offset from -8 mV to +7 mV. 2's complement	7 = 7 mV 15 = - 1 mV 6 = 6 mV 14 = - 2 mV … 1 = 1 mV 9 = - 7 mV 0 = 0 mV 8 = - 8 mV
TW2	Timer to charge up the capacitor of the recommend RC network when the internal analog part is used.	Charge time: 0 = 90 µs 1 = 120 µs 2 = 150 µs 3 = 300 µs, recommended setting
EN_INT[3]	Additional interrupt source. See also register 2 for the lower 3 bits of EN_INT. The various sources are wired by an OR. An EEPROM action, e.g. EEPROM_COMPARE, is managed by the TDC-GP21 and especially the EEPROM write may last up to 130ms. Indicating the end will be helpful.	1 = end of EEPROM action
START_CLKHS[2]	Highest bit to set the settling time for the high speed oscillator. The lower bits are set in register 0, bit 18 and 19.	0 = off 1 = continously on 2 = 480 µs delay 3 = 1.46 ms 4 = 2.44 ms 5 to 7 = 5.14 ms

CYCLE_TEMP	Selects timer for triggering the second temperature measurement in multiples of 50/60Hz	0 = 1 1 = 1.5 2 = 2 3 = 2.5
CYCLE_TOF	Selects timer for triggering the second ToF measurement in multiples of 50/60Hz	0 = 1 1 = 1.5 2 = 2 3 = 2.5
HZ60	TDC-GP21 can make complete up and down flow measurement and also two temperature measurements in series. The time interval between 2 measurements is based on 50 or 60 Hz.	0 = 50 Hz base, 20 ms 1 = 60 Hz base, 16.67ms
FIRE0_DEF	Specifies the default level of the inactive fire buffer. Example: if FIRE_UP is active then the FIRE_DOWN buffer is connected to the default level. Setting 1 is mandatory when using the integrated analog section.	0 = High-Z (as in GP2) 1 = LOW
QUAD_RES	Option to improve the resolution by factor 4 from 90 ps to 22 ps. Can be used only in measurement mode 2.	0 = off (TDC-GP2 mode) 1 = on
DOUBLE_RES	Doubles the resolution from 90 ps to 45 ps. In measurement mode 1 this option limits the number of stop inputs to one (Stop1)	0 = off (TDC-GP2 mode) 1 = on
TEMP_PORTDIR	Ports for temperature measurement are measured in the opposite order.	0 = PT1 > PT2 > PT3 > PT4 1 = PT4 > PT3 > PT2 > PT1
ANZ_FIRE[6:4]	Highest 3 bits of the number of fire pulses. See also register 0. If ANZ_FIRE > 15 then PHFIRE is no longer active.	0 = off 1 = 1 pulse 2 = 2 pulses … 127 = 127 pulses
ID6	Free bits, e.g. to be used as identification or version number	

3.2 Read registers

The result and status registers can be read by means of opcode 'hBx. The opcode is followed by 4, 2 or 1 bytes, depending on the address.

The ID register bits in the configuration registers can be read back by means of opcode 'hB7. This opcode is followed by 7 bytes in the order ID0, ID1 ... ID6, each byte with the MSB first.

Table 3-2: Read Registers

ADR	Symbol	Bits	Description									
0	RES_0	32	Measurement result 1, fixed-point number with 16 integer and 16 fractional digits 2^{15} 2^{0}, 2^{-1} 2^{-16}									
1	RES_1	32	Measurement result 2, fixed-point number with 16 integer and 16 fractional digits									
2	RES_2	32	Measurement result 3, fixed-point number with 16 integer and 16 fractional digits									
3	RES_3	32	Measurement result 4, fixed-point number with 16 integer and 16 fractional digits									
4	STAT	16	15	14	13	12	11	10	9	8 - 6	5 - 3	2 - 0
			EEPROM_eq_CREG	EEPROM_DED	EEPROM_Error	Error short	Error open	Timeout Precounter	Timeout TDC	# of hits Ch 2	# of hits Ch 1	ALU_ OP_ PTR
5	REG_1	8	Content of highest 8 bits of write register 1, to be used for testing the communication									
8	PW1ST	8	Pulse width 1st wave compared to measured hits, fixed point with 1 bit integer									

3.2.1 Result Registers

The data structure and the occupancy of the result registers depend on the operation mode and whether calibrated or non-calibrated data are stored. Several cases must be distinguished:

Only in measurement mode 1 negative results are possible.

In measurement mode 2 only positive results are possible, given as unsigned numbers.

A non-calibrated measure is possible only in measurement mode 1.

In measurement mode 1 with calibrated data (ALU) the time intervals that have to be measured can not exceed twice the period of the calibration clock. When measuring bigger time intervals an ALU - overflow will occur and 'hFFFFFFFF is written in the appropriate result register.

a. Measurement mode 1 with calibrated data (CALIBRATE = 1)

The results are given in multiples of the internal reference clock (= external reference clock divided by 1, 2 or 4 (DIV_CLKHS)). Calibrated data are 32 bit fixed point numbers with 16 integer bits and 16 fractional bits. Any calibrated result covers therefore 1 result register. The serial output begins with the highest bit (2^{15}) and ends with the lowest one (2^{-16}). The numbers are available in complements of 2.

$$\text{Time} = \text{RES_X} * T_{ref} * 2^{\text{DIV_CLKHS}} = \text{RES_X} * T_{ref} * N \text{ , with } N = 1, 2 \text{ or } 4$$

$$\text{Time} < 2 * T_{ref} * 2^{\text{DIV_CLKHS}}$$

b. Measurement mode 1 without calibration (CALIBRATE = 0)

Non-calibrated data are of the type 'Signed Integer' and are stored as a 16 bit value in the high word of the result registers. The bits of the low word are set to zero. The result is represented as number of LSB and is available in complements of 2.

$$\text{Time} = \text{RES_X} * \text{LSB} \sim \text{RES_X} * 90 \text{ ps}$$

c. Measurement mode 2

In measurement mode 2 the TDC-GP22 only supports calibrated measurement. The results are given in multiples of the internal reference clock (= external reference clock divided by 1, 2 or 4 (DIV_CLKHS)). Calibrated data are 32 bit fixed point numbers with 16 integer bits and 16 fractional bits. Any calibrated result covers therefore 1 result register. The serial output begins with the highest bit (2^{15}) and ends with the lowest one (2^{-16}). The numbers are available in complements of 2.

$$\text{Time} = \text{RES_X} * T_{ref} * 2^{\text{DIV_CLKHS}} = \text{RES_X} * T_{ref} * N \text{ , with } N = 1, 2 \text{ or } 4$$

d. Temperature measurement

Discharge time in the same format as in c., measurement mode 2.

The ratio of the discharge times equal the ratio of resistance:

$R_T = R_{ref} * \tau_T / \tau_{ref}$

3.2.2 Status Register

Table 3-3: Status registers

Bits	Name	Description	Values
2 – 0	ALU_OP_PTR	ALU operation pointer. Pointer to the result register. See description below	
5 – 3	# of hits Ch 1	Number of hits registered on channel 1	
8 – 6	# of hits Ch 2	Number of hits registered on channel 2	
9	Timeout TDC	Indicates an overflow of the TDC unit	1 = overflow
10	Timeout Precounter	Indicates an overflow of the 14 bit precounter in MR 2	1 = overflow
11	Error open	Indicates an open sensor at temperature measurement	1 = open
12	Error short	Indicates a shorted sensor at temperature measurement	1 = short
13	EEPROM_Error	Single error in EEPROM which has been corrected	1 = error
14	EEPROM_DED	Double error detection. A multiple error has been detected which can not be corrected.	1 = multiple error
15	EEPROM_eq_CREG	Indicates whether the content of the configuration registers equals the EEPROM	1 = equal

ALU Operation Pointer

Description: The ALU operation pointer is stored in bits 0-2 of the status register (range of 0x00 to 0x03) and provides an index to one of the 4 results registers (RES_0 to RES_3) as follows:

- When the EN_AUTOCALC_MB2 parameter is set to 0, and therefore autocalculation is OFF, the ALU operation pointer is set to the next free result register that will be used by the ALU for its next TDC cycle. This occurs once a TDC measurement is performed. Therefore after a TDC measurement ALU_OP_PTR minus 1 will point to the ALU result.
- When EN_AUTOCALC_MB2 is 1 (autocalculation ON) and once a TDC measurement is performed the ALU operation pointer is set to the result register that contains the sum of the hit calculations stored in RES_0 to RES_2. This calculation does not

increase the ALU operation pointer. Of course, if the number of hits you expect is less than 4 (3 results + 1 start), then not all of the registers from RES_0 to RES_2 will be used in the sum.

Example 1: EN_AUTOCALC_MB2 = OFF

After sending an INIT opcode:
ALU_OP_PTR == 0x00

TDC Measurement Performed, ALU performs one calculation.
ALU_OP_PTR == 0x01
Calculation result is in register 0 (ALU_OP_PTR -1)

By writing to configuration register 1 the ALU performs a second calculation
ALU_OP_PTR == 0x02
Calculation result is in register 1 (ALU_OP_PTR -1)

By writing to configuration register 1 the ALU performs a third calculation
ALU_OP_PTR == 0x03
Calculation result is in register 2 (ALU_OP_PTR -1)

Example 2: EN_AUTOCALC_MB2 = ON

Three hits are configured by the user

TDC measurement performed
ALU_OP_PTR == 0x03
Automatic calculation of the sum of RES_0 + RES_1 + RES_2
Calculation result is in register 3 (ALU_OP_PTR)

3.2.3 PW1ST Register

This register holds a 8-bit fixed point number with 1 integer and 7 fractional digits.

PW1ST gives the ratio of the width of the first half wave (at a given offset) compared to the half period of the received signal. See section 4.4 for further details.

Data range: 0 to 1.99219
(with EDGE_FW = rising edge and negative offset the ratio is > 1).

3.3 EEPROM

The TDC-GP22 has a 7x32 bit EEPROM. This EEPROM can be used to store the configuration data together with the ID or version number. Only the following three actions are possible:

- Write configuration register content into the EEPROM
- Transfer the EEPROM content into the configuration registers
- Compare the configuration registers' content with the EEPROM content

Important Note:
If values are to be stored in the EEPROM it is mandatory to ensure that NO measurement is running (neither ToF nor temperature nor calibration measurements). During measurement a write access to the EEPROM is not permitted. The write access to the EEPROM takes about 300 ms. With no consideration, the EEPROM may be written with incorrect values. It may even happen that adjustment values are overwritten which prevents proper operation of the TDC.

Besides the ID it is not possible to read back the EEPROM. This gives customers the possibility to program the chips by themselves and prohibit other to read back the configuration.

For verification it is possible to compare the configuration register may be compare with the EEPROM. Bit EEPROM_eq_CREG in the status register indicates whether the content is equal or not.

The EEPROM has an internal error correction (Hamming code). It is possible

- to detect and correct single bit errors,
- to detect multi-bit errors without correction

Errors are indicated in the status register, bits EEPROM_Error (single bit) and EEPROM_DED (double error detection).

*****With each read access/compare to the EEPROM the error bit is checked. In case a single bit error is detected a refresh cycle is started automatically and the data is restored.

The data retention of the EEPROM is > 10 years @ 85 °C without single or multiple errors. With regular Compare_EEPROM commands (e.g. once per month) the data retention can be extended unlimited.

3.4 SPI-interface

The serial interface is compatible with the 4-wire SPI standard. It needs the SerialSelectNot (SSN) and can not operated as 3-wire interface.

SSN - Slave Select
SCK - SPI Clock
SI - SPI Data In
SO - SPI Data Out
The TDC-GP22 does only support the following SPI mode (Motorola specification)*:

Clock Phase Bit = 1 Clock Polarity Bit = 0

SCK starts with LOW, data take over is with the falling edge of SCK. The timings are shown in section 2.3. The interrupt pin is set back to INTN = 1 if:

- SSN goes LOW
- or, in case SSN is already LOW, with the first rising edge of SCK.

SSN as Reset

The SerialSelectNot (SSN) line is the HIGH-active reset for the serial interface. After SSN is set to LOW different operations can be addressed, not depending on the status of the interface before the reset.

Note:

It is mandatory to set the SSN – line to High-state for at least 50 ns between each Read-/Write sequence.

* There is no common SPI specification, especially for phase & polarity. Some microcontroller may need a different setting, e.g. MSP430 run with Clock Phase = Clock Polarity = 0

Opcodes

Table 3-4: Opcodes

Hex	MSB							LSB	Description	Followed by
'h8x	1	0	0	0	0	A2	A1	A0	Write into address A	24 bit or 32 bit data
'hBx	1	0	1	1	0	A2	A1	A0	Read from address A	8, 16 or 32 bit data
'hB7	1	0	1	1	0	1	1	1	Read ID bit	56 bit ID'S

Hex	MSB							LSB	Description	Followed by
'hB8	1	0	1	1	1	0	0	0	Read PW1ST	8bit
'hC0	1	1	0	0	0	0	0	0	Write configuration registers into EEPROM	
'hF0	1	1	1	1	0	0	0	0	Transfer EEPROM content into configuration registers	
'hC6	1	1	0	0	0	1	1	0	Compare configuration registers with EEPROM	
'h70	0	1	1	1	0	0	0	0	Init	
'h50	0	1	0	1	0	0	0	0	Power On Reset	
'h01	0	0	0	0	0	0	0	1	Start_TOF	
'h02	0	0	0	0	0	0	1	0	Start_Temp	
'h03	0	0	0	0	0	0	1	1	Start_Cal_Resonator	
'h04	0	0	0	0	0	1	0	0	Start_Cal_TDC	
'h05	0	0	0	0	0	1	0	1	Start_TOF_Restart	
'h06	0	0	0	0	0	1	1	0	Start_Temp_Restart	

The transfer starts with the MSB and is finished sending the LSB. The transfer is done bytewise. Data transfer can be stopped after each byte, sending a LOW-HIGH-LOW on the SSN line.

Example:
'h80 + 3 bytes will write configuration register 0 in the TDC-GP2 compatible mode.
'h80 + 4 bytes will write configuration register 0 including ID0 (TDC-GP22 only).
It is not possible to do incremental writing. Each register must be addressed separately.

3.4.1 Opcode Explanations

1. 'hC0, 'hF0, 'hC6 all refer to EEPROM operations. Those may last up 130 ms, especially the EEPROM write. Therefore, the EN_INT bit 3 in register 6 indicates the end of the EEPROM operation. This can be used to adjust microprocessor actions.

2. 'h01, Start_TOF: triggers a sequence for a single time-of-flight measurement. First, the 4 MHz oscillator is switched on. After the delay set to settle the oscillator (START_CLKHS), the comparator and the reference voltage are switched on. The receiver capacitor is charged up th Vref while inactive fire buffer is pulled down to GND. After the delay set to charge up the capacitor (TW2), the fire buffer sends the fire pulses. After the delay set in DELVAL the TDC stop channel is open. At the end of the measurement the analog section and the 4 MHz are switched off and the current consumption drops down to near zero. The interrupt is set, pin INTN = LOW.
3. 'h05, Start_TOF_Restart: This opcode runs the Start_TOF sequence twice, in up and down direction as it is typical in ultrasonic flow meters. The interrupt is set, pin INTN = LOW, when the time measurement for each direction is finished. So, for one Start_TOF_Restart command the microprocessor sees two interrupts and has to read twice. The time interval between the up and down measurement is set by configuration parameter CYCLE_TOF in multiples of 50 Hz or 60 Hz. The right selection of the delay between the two measurements suppresses 50/60 Hz noise.

CYCLE_TOF	factor	HZ60 = 0(50Hz)	HZ60 = 1(60Hz)
0	1	20 ms	16.67 ms
1	1.5	30 ms	25.00 ms
2	2	40 ms	33.33 ms
3	2.5	50 ms	41.67 ms

- 'h02, Start_Temp: triggers a single temperature measurement sequence. It begins with the fake measurements (ANZ_FAKE) on port PT0. Then it measures ports PT0 > PT1 > PT2 > PT4. If TEMP_PORTDIR is set one then the sequence of ports is inverted, starting with the fake measurements at port PT4.
- 'h06, Start_Temp_Restart: This opcode runs the Start_Temp sequence twice. The time interval between the up and down measurement is set by configuration parameter CYCLE_TEMP in multiples of 50 Hz or 60 Hz. The right selection of the delay between the two measurements suppresses 50/60 Hz noise.

CYCLE_TEMP	**factor**	**HZ60 = 0 (50Hz)**	**HZ60 = 1 (60Hz)**
0	1	20 ms	16.67 ms
1	1.5	30 ms	25.00 ms
2	2	40 ms	33.33 ms
3	2.5	50 ms	41.67 ms

- 'h03, Start_Cal_Resonator: Triggers a calibration measurement of the high speed oscilator. The TDC measures a time interval between 61 µs and 488 µs, specified in ANZ_PER_CALRES. The end of the measurement is indicated by the interrupt. The result, in multiples or the high speed clock period, is stored in result register 0. Dividing this by the theoretical value gives the correction factor.
- 'h04, Start_Cal_TDC: This command starts a measurement of 2 periods of the reference clock. It is used to update the calibration raw data. Typically, the chip is configured for auto-calibration and this command is not necessary.

3.4.2 SPI Sample

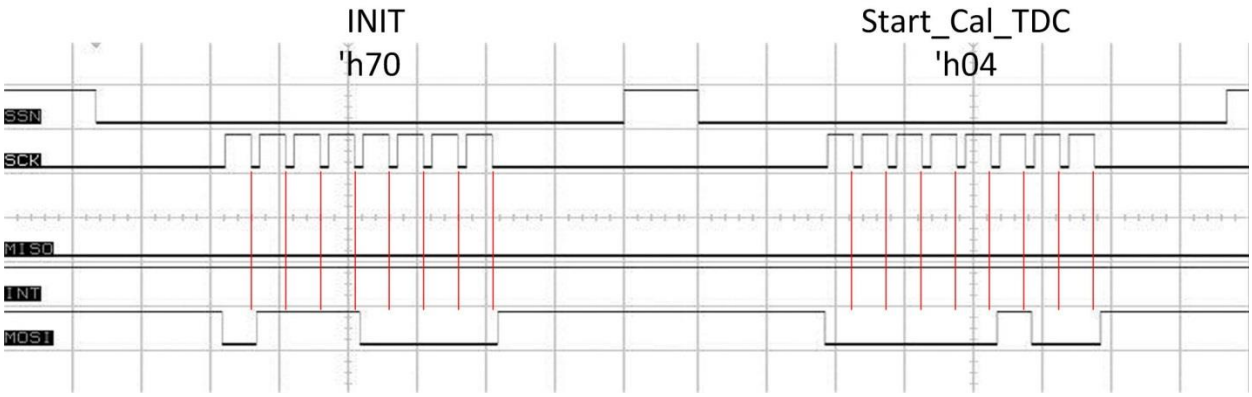

Figure 3-1: Sample scope picture for sequence INIT 'h70 and Start_Cal_TDC = 'h04

4 Converter Frontend

4.1 TDC - Measurement mode 1

4.1.1 General Description

- Measurement range from 3.5 ns to 2.4 µs (0 to 2.4 µs between stop channels)
- 2 stop channels referring to one start channel each of typ. 90 ps resolution
- 1 stop channel referring to one start channel with typ. 45 ps resolution
- 20 ns pulse pair resolution
- 4-fold multihit capability for each stop channel
- Selectable rising/falling edge sensitivity for each channel
- Enable pins for windowing functionality
- The possibility to arbitrarily measure all events against each other
- Typical application: Laser ToF, RF ToF, ATE

Digital TDCs use internal propagation delays of signals through gates to measure time intervals with very high precision. Figure 5 clarifies the principal structure of such an absolute-time TDC. Intelligent circuit structures, redundant circuitry and special methods of layout on the chip make it possible to reconstruct the exact number of gates passed by the signal. The maximum possible resolution strongly depends on the maximum possible gate propagation delay on the chip.

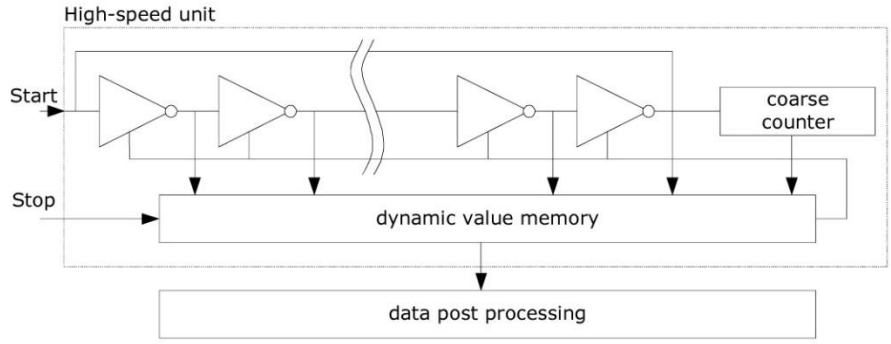

Figure 4.1

The measuring unit is triggered by a START signal and stopped by a STOP signal. Based on the position of the ring oscillator and the coarse counter the time interval between START and STOP is calculated with a 20 bit measurement range.

The BIN size (LSB) is typically 90 ps at 3.3 V and 25 °C ambient temperature. The RMS noise is about 60 ps (0.7 LSB). The gate propagation delay times strongly depend on

temperature and voltage. Usually this is solved doing a calibration. During such a calibration the TDC measures 1 and 2 periods of the reference clock.

The measurement range is limited by size of the counter:

t_{yy} = BIN x 26224 ~ 90 ps x 26224 = 2.4 µs

	Time (Condition)	Description
t_{ph}	2,5 ns (min.)	Minimum pulse width
t_{pl}	2,5 ns (min.)	Minimum pulse width
t_{ss}	3.5 ns ns (min) 2.4 µs (max.)	Start to Stop
t_{rr}	20 ns (typ.)	Rising edge to rising edge
t_{ff}	20 ns (typ.)	
t_{va}	1.24µs uncalibrated 4.25µs calibrated	Last hit to data valid
t_{xx}	No timing limits	
t_{yy}	2.4 µs (max)	Max. measurement range = 26224 * LSB

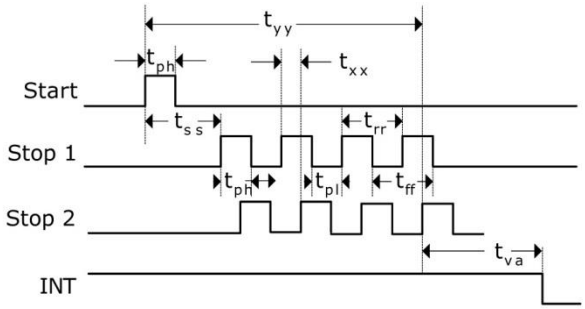

Figure 4.2

Input circuitry

Each input separately can be set to be sensitive to rising or falling edge or both edges. This is done in register 0, bits 8 to 10. (NEG_START, NEG_STOP1, NEG_STOP2) and register 2, bit 27 & 28, RFEDGEx.

Furthermore all Start/Stop-inputs support a high active enable pin.

4.1.2 Measurement Flow

Configuration

At the beginning the TDC-GP22 has to be configured. The main settings for measurement mode 1 are:

a. Select measurement mode 1

Set register 0, bit 11, MESSB2 = 0.

Register 6, bit 12, DOUBLE_RES = 1 selects double resolution. With this bit set the resolution is typ. 45 ps instead of 90 ps, but only one STOP channel is available.

b. Select the reference clock (see also section 5.1)

Register 0, bits 18 & 19 and register 6, bit 20, START_CLKHS defines the switch-on behavior of the high-speed clock. If only the 32 kHz is used it should be "0". If only the high-speed clock is used it should be "1" (continuously on).

Register 0, bits 20 & 21, DIV_CLKHS sets an additional internal divider for the reference clock (1, 2 or 4). This is important for calibrated measurements in measurement mode 1 because the ALU works correctly only if $2*T_{ref}$(intern) is bigger than the maximum time interval to be measured. Otherwise the ALU output is 'hFFFFFFFF.

Make also sure that $2*T_{ref}$(intern) < 2.4 µs to avoid a timeout during calibration.

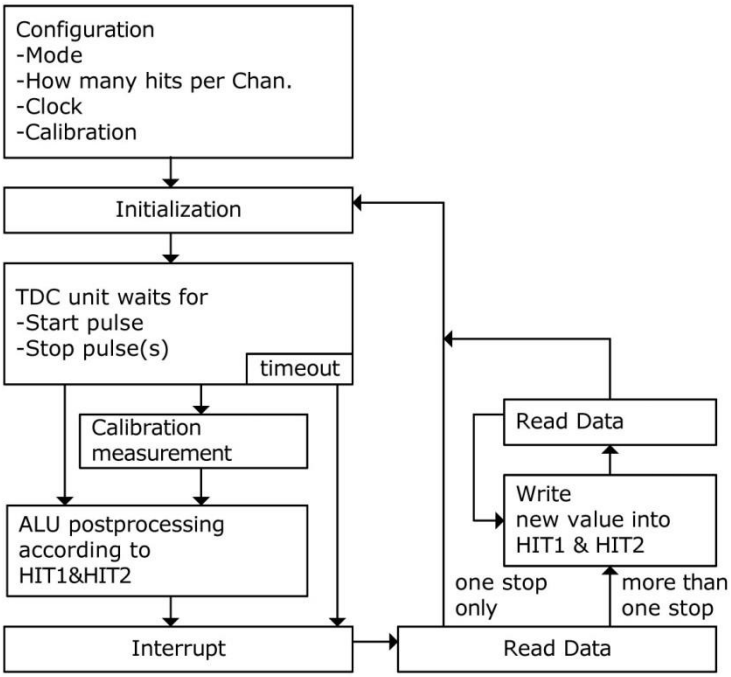

Figure 4.3

c. Set the number of expected hits

In register 1, bits 16 to 18 and 19 to 21, HITIN1 and HITIN2 the user has to define the number of hits the TDC-GP22 has to wait for. A maximum of 4 on each channel is possible. The TDC-GP22 measures until the set number of hits is registered or a timeout occurs.

d. Select calibration

As the BIN size varies with temperature and voltage the TDC-GP22 ALU can internally calibrate the results. This option is switched on by setting register 0, bit13, CALIBRATE = "1". It is recommended to do this.

For the calibration the TDC measures 1 and 2 cycles of the reference clock. The two data are stored as Cal1 and Cal2.

There are two ways to update the calibration data Cal1 and Cal2:
- Separate calibration by sending opcode Start_Cal_TDC via the SPI interface
- Automatic update by setting register 0, bit 12, NO_CAL_AUTO = "0". In most applications this will be the preferred setting.

e. Define ALU data processing

While the TDC unit can measure up to 4 hits on each channel the user is free in his definition what the ALU shall calculate. The settings are done in register 1, bits 16 to 19 and 20 to 23, HIT1 and HIT2. Both parameters can be set to:

0 = Start
1 = 1. Stop Ch1 9 = 1. Stop Ch2
2 = 2. Stop Ch1 A = 2. Stop Ch2
3 = 3. Stop Ch1 B = 3. Stop Ch2
4 = 4. Stop Ch1 C = 4. Stop Ch2
6 = Cal1 Ch1
7 = Cal2 Ch1

Examples:

Reg1 = 'h01xxxx - 1st Stop Ch1-Start

Reg1 = 'h2Bxxxx - 3rd Stop Ch2-2nd Stop Ch1

Reg1 = 'h06xxxx - Cal1

The ALU calculates HIT1 - HIT2.

In case calibration is active the ALU does the full calibration calculation (except when reading the calibration values. In this case the ALU writes the Cal1/Cal2 raw data to the output register).

$$RES_X = \frac{(HIT1 - HIT2)}{Cal2 - Cal1}$$

$$Cal2 - Cal1 = gradient$$

$$Time = RES_X * T_{ref} * 2^{ClkHSDiv} = RES_X * T_{ref} * N\,, \qquad with \;\; N = 1, 2 \; or \; 4$$

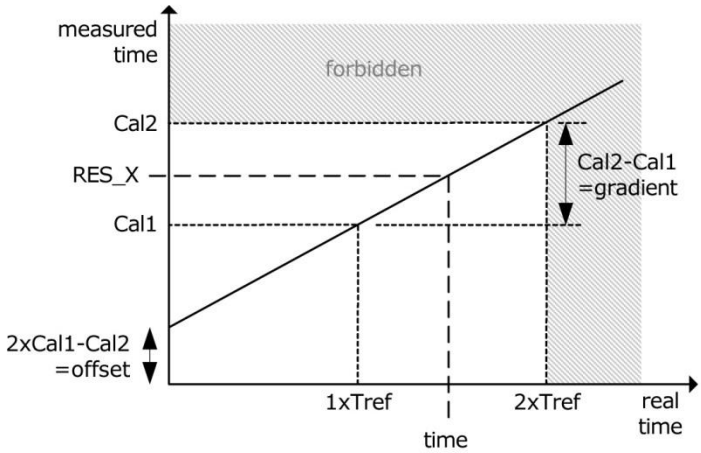

Figure 4.4

f. Select input sensitivity

In register 2, bits 27 & 28, RFEDGE1 and RFEDGE2, the user can select whether the stop inputs are sensitive to either rising or falling edges (RFEDGE = "0") or to both rising and falling edges (RFEDGE = "1").

In register 0, bits 8 to 10 the user can add an internal inverter to each input, Start, Stop1 and Stop2. With RFEDGE = "0" this is the same as rising edge (NEG_X = "0") or falling edge (NEG_X = "1").

g. Interrupt behavior

The interrupt pin 8, INT can have different sources. They are selected in register 2, bits 29 to 31, EN_INT and register 6, bit 21.

Reg. 2 bit 29 = "1"	ALU ready
Reg. 2 bit 30 = "1"	The set number of hits is there
Reg. 2 bit 31 = "1"	Timeout of the TDC unit
Reg. 6 bit 21 = "1"	End of EEPROM action

The different options are wired by OR to enable more than one source. The first rising edge of SCK resets the INTN pin (interrupt).

After the configuration the user has to initialize the TDC-GP22 by sending opcode "Init" so that the TDC accepts Start and Stop hits.

Measurement

After an initialization the TDC unit will start with the first pulse on the Start input. It will run until:

- the set number of hits has been seen (maximum 4 on both stop channels in mode 1)
- or until a timeout occurs at the end of the measurement range (at about 2.4 µs in mode 1).

The time measurement raw data are internally stored. The number of hits can be seen from the status register, bits 3 to 8. In case calibration is active the TDC now measures one and two periods of the internal reference clock (T_{ref} * 1, 2 or 4). The calibration raw data Cal1 and Cal2 are also internally stored.

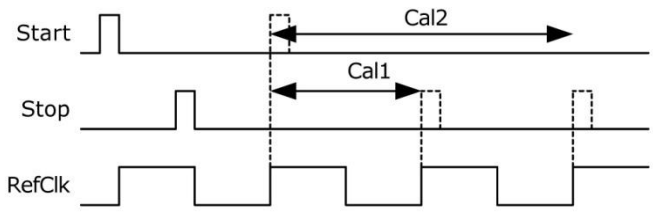

Figure 4.5

Data Processing

At the end of the measurement the ALU starts to process the data according to the HIT1, HIT2 settings and transfers the result to the output register. In case calibration is off the ALU transfers the 16 bit raw data to the output register. With calibration the ALU calculates according to 3.1.1.d and transfers the 32 bit fixed point number to the output register.

The ALU can be switched off configuring HIT1 = HIT2 = 5.

The time it takes the ALU depends on whether calibration is on or not and the supply voltage.

Table 4.1: ALU timings

	un-calibrated (disable Auto-Cal.)	calibrated	Predivider
2.5 V	1.56 µs	3.0 µs	0
		4.58 µs	1
		7.58 µs	2
3.0 V	1.24 µs	2.75 µs	0
		4.25 µs	1
		7.26 µs	2
3.6 V	1.0 µs	2.54 µs	0
		4.0 µs	1
		7.0 µs	2

As soon as the data is available from the output register the interrupt flag is set (assumed that the ALU interrupt is enabled, see reg. 2, EN_INT). Further the load pointer of the output register is increased by 1 and points to the next free memory. The actual position of the load pointer can be seen in the status register, bits 0 to 2.

Reading Data

Now the user can read the data sending the opcode 10110ADR. With the next 16 clock cycles (un-calibrated data) or 32 clock cycles (calibrated data) the TDC-GP22 will send the result, beginning with the most significant bit (MSB). The first rising edge of SCK resets the INTN pin (interrupt).

a. Un-calibrated data format:

16 bit Signed integer in complements of 2. 1BIN = uncalibrated gate delay is about 90 ps at 3.3 V and 25 °C.

Time = RES_X x 90 ps

b. Calibrated data format:

32 bit fixed-point number in complements of 2. Given in multiples of the reference clock.

Time = RES_X * T_{ref} * N, with N = 1, 2 or 4

Example:

configuration

...

write reg1='h014400 4 hits on channel 1, calculate 1st Stop -Start

...

Initialize

...

while(Check interrupt flag)

write reg1='h024400 calculate 2nd -Start

wait(4.6 µs)

write reg1='h034400 calculate 3rd-Start

wait(4.6 µs)

write reg1='h044400 calculate 4th-Start

wait(4.6 µs)

Now all Hit data are available from registers 0 to 3. The load pointer value is 4.

The measured time interval may not exceed otherwise the ALU will go into overflow and will write the data 'hFFFFFFFF to the output register.

The configuration of the ALU allows only one hit calculation at the time. In case more than one hit has been measured it is necessary to write new commands to HIT1/HIT2 to instruct the ALU for calculating the other hits. After writing to HIT1/HIT2 it is necessary to wait for minimum t.b.d. µs (calibrated data) or t.b.d. ns (un-calibrated data) before reading or writing again to HIT1/HIT2.

Reading Calibration Raw Data

The calibration data are not addressed directly after the calibration measurement but after the next regular measurement, before the next INIT.

Source Code Example:

```
//-----------------------------------------------------------------------
    // 1st Measurement plus calibration data readout
    gp22_send_1byte(Bus_Type, Init);

    // Wait for INT Slot_x
    Wait_For_Interrupt(Bus_Type);

    // First regular measurement (to readout calibration raw data)
    Result = gp22_read_n_bytes(Bus_Type, 4 ,0xB0 ,0x00 ,16);

    // readout the new calibration data from result register adr 0x01
    gp22_wr_config_reg(Bus_Type, 0x81, 0x67490000);

    Diff_Cal2_Cal1 = gp22_read_n_bytes(Bus_Type, 4, 0xB0 ,0x01 ,16);
//-----------------------------------------------------------------------
```

At the end the TDC-GP22 has to be initialized again to be ready for the next measurement. This is done by sending the opcode "Init" so that the TDC accepts new Start and Stop hits.

4.2 TDC - Measurement mode 2

4.2.1 General Description

- 1 stop channels referring to one start channel
- Typical 22 ps / 45 ps / 90 ps resolution
- Measurement range from 700 ns to 4 ms @ 4 MHz
- 2 x T_{ref} pulse pair resolution
- 3-fold multihit capability, full-automated calculation
- Selectable rising/falling edge sensitivity
- Integrated programmable windowing for each single stop with 10 ns precision
- Typical application: Ultrasonic flow & heat meter

Digital TDCs use internal propagation delays of signals through gates to measure time intervals with very high precision (see also measurement mode 1, section 4). In measurement mode 2 the maximum time interval is extended using a pre-divider. The resolution in LSB remains unchanged by that. In this mode the high-speed unit of the TDC does not measure the whole time interval but only time intervals from START and STOP to the next rising edge of the reference clock (fine-counts). In between the fine-counts the TDC counts the number of periods of the reference clock (coarse-count).

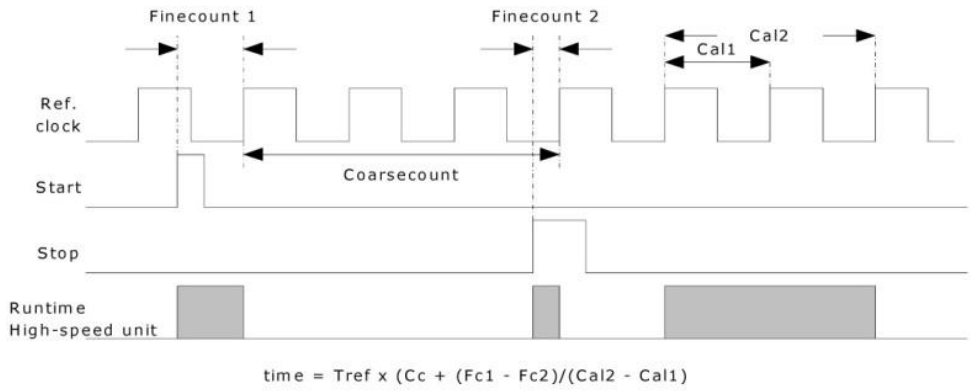

Figure 4.6

The GP22 converter front end section achieves a quantization BIN of 90 ps (LSB) where Vcc = 3.3 V and the ambient temperature is at 25 °C. RMS noise accounts for 60 ps (0.7 LSB) of this same result. As gate propagation delay is used for precision interval measurement it is important to consider that this delay time is directly affected by both Vcc and temperature. Therefore, using Measurement Mode 2, a calibration is required and is done automatically with the right configuration. During calibration the TDC measures one and two periods of the 4 MHz reference clock.

The calibrated result does not depend on temperature or supply voltage.

The measurement range is limited by size of the coarse counter:

$t_{yy} = T_{ref} \times 2^{14} = 4.1ms$ @ 4MHz

The time interval between START and STOP is calculated with a 26 bit measurement range.

	Time (Condition)	Description
t_{ph}	2,5 ns (min.)	Minimum pulse width
t_{pl}	2,5 ns (min.)	Minimum pulse width
t_{ss}	$2*T_{ref}$	Start to Stop @ DIS_PHASESHIFT = 1
t_{rr}	$2*T_{ref}$	Rising edge to rising edge
t_{ff}	$2*T_{ref}$	Falling edge to falling edge
t_{va}	4.6 µs (max.)	ALU start to data valid
t_{yy}	4 ms (max)	Max. measurement range

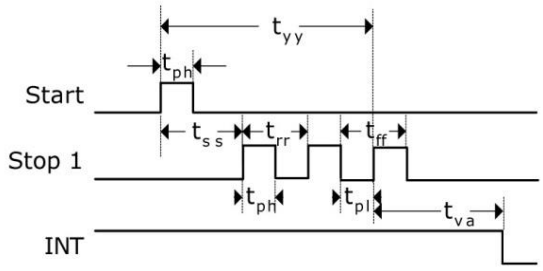

Figure 4.7

Input circuitry

Each input separately can be set to be sensitive to rising or falling edge. This is done in register 0, bits 0 to 2. (NEG_START, NEG_STOP1).

Further all Start/Stop-inputs support a high active enable pin.

Note:

In case the Start-Stop interval is less than the lower limit tzz the TDC will ignore more and more events the smaller it is. In no case there will be wrong results.

4.2.2 Measurement Flow

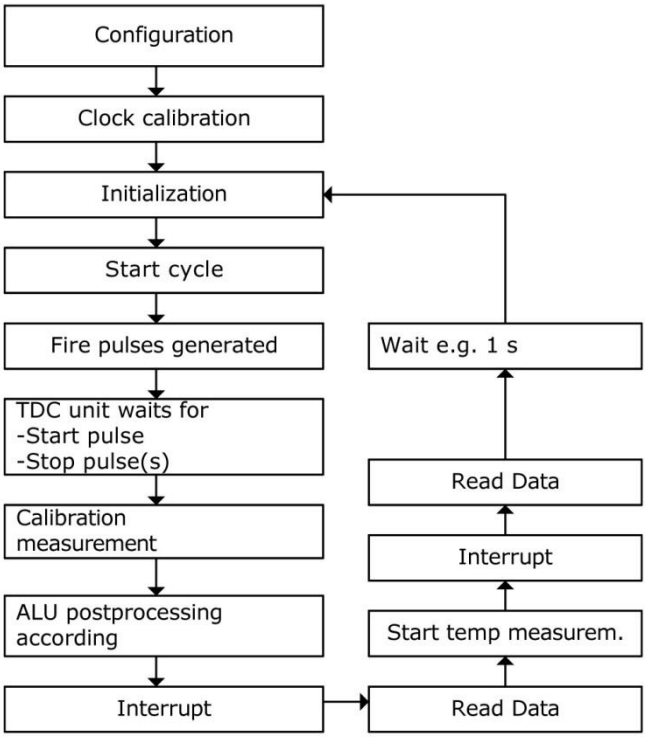

Figure 4.8

Configuration

At the beginning the TDC-GP22 has to be configured. The main settings for measurement mode 2 are:

a. Select measurement mode 2

setting register 0, bit 11, MESSB2 = 1

b. Select the reference clock

(see also section 5.1)

In measurement mode 2 the TDC-GP22 needs the high-speed clock for the time measurement. In case of low-power applications this clock can be switched of in between measurements. The a 32.768 kHz clock is necessary for the timing control during the oscillator power-on.

Register 0, bits 18 & 19, START_CLKHS defines the switch-on behavior of the high-speed clock. If only the high-speed clock is used this is be set to "1"(continuously on). In case both oscillators are used for current saving reasons this should be set to "2" for ceramic oscillators and to "3" for quartz oscillators.

Register 0, bits 20 & 21, DIV_CLKHS sets an additional internal divider for the reference clock (1, 2 or 4). The choice has an influence on the minimum time interval

$$t_{min} = 2 * T_{ref} * 2^{DIV_CLKHS}$$

and the maximum time interval

$$t_{max} = 2^{14} * T_{ref} * 2^{DIV_CLKHS}$$

Further, it is necessary that

$$2 * T_{ref} * 2^{DIV_CLKHS} < 2.4\ \mu s.$$

Otherwise the ALU will go into an overflow during calibration and write 'hFFFFFFFF as output data.

Please note:

The resulting clock after the predivider has to be in the allowed range of 2 MHz to 8 MHz in single and double resolution and from 2 MHz … 6 MHz in quad resolution.

c. Set the number of expected hits

In register 1, bits 16 to 18, HITIN1 the user has to define the number of hits the TDC-GP22 has to wait for. A maximum of 3 on channel 1 is possible. The number HITIN1 always has to be higher by 1 than the number of expected hits. The reason is that the Start is also counted as a hit. The TDC-GP22 measures until the set number of hits is registered or a timeout occurs. register 1, bits 19 to 21, HITIN2 have to be set to "0".

Example:

2 stop pulses are expected:

HITIN1 = "3", HITIN2 = "0"

d. Select calibration

The calibration is switched on by setting register 0, bit13, CALIBRATE = "1". It is mandatory to do this.

For the calibration the TDC measures 1 and 2 cycles of the reference clock. The two data are stored as Cal1 and Cal2.

There are two ways to update the calibration data Cal1 and Cal2:

- Separate calibration by sending opcode Start_Cal_TDC via the SPI interface
- Automatic update by setting register 0, bit 12, NO_AUTO_CAL = "0". In most applications this will be the preferred setting.

e. Define ALU data processing

With EN_AUTOCALC_MB2 = 1 the TDC-GP22 calculates all set hits automatically. In addition, the sum of the results is calculated, too, and written into read register RES_3. This simplifies the communication compared to TDC-GP21 as it is no longer necessary to re-write register 1.

With EN_AUTOCALC_MB2 disabled the ALU calculates only one hit at once. The settings are done in register 1, bits 24 to 27 and 28 to 31, HIT1 and HIT2. The Start pulse is internally handled like a Stop pulse because of the special measuring method in measurement mode 2.

Reg1 = 'h21xxxx = Calculate 1st Stop Ch1-Start

Reg1 = 'h31xxxx = Calculate 2nd Stop Ch1-Start

Reg1 = 'h41xxxx = Calculate 3rd Stop Ch1-Start

The ALU calculates the time interval as:

$$RES_X = CoarseCount + \frac{(HIT1 - HIT2)}{Cal2 - Cal1}$$

$$Time = RES_X * Tref * 2^{DIV_CLKHS}$$

f. Select input sensitivity

In register 2, bits 27 & 28, RFEDGE1 and RFEDGE2, the user can select whether the stop inputs are sensitive to either rising or falling edges (RFEDGE = "0") or to both rising and falling edges (RFEDGE = "1"). In register 0, bits 8 to 10 the user can add an internal inverter to each input, Start, Stop1 and Stop2. With RFEDGE = "0" this is the same as rising edge (NEG_X = "0") or falling edge (NEG_X = "1").

g. Interrupt behavior

The INT pin can have various sources, to be selected in register 2, bits 21 to 23, EN_INT, and register 6 bit 21 EN_INT.

EN_INT =	no bits set	no Interrupt source
	reg2 bit 29	ALU ready
	reg2 bit 30	The set number of hits is there
	reg2 bit 31	Timeout of the TDC unit
	reg6 bit 21	EEPROM action has finished

The different options are wired by OR. The first rising edge of SCK resets the INTN pin (interrupt).

After the configuration the user has to initialize the TDC-GP22 by sending opcode "Init" so that the TDC accepts Start and Stop hits.

Measurement

After an initialization the TDC unit will start with the first pulse on the Start input. It will run until:

- the set number of hits has been seen (maximum 3 on channel 1 in measurement mode 2)
- or until a timeout occurs. The timeout can be programmed in multiples of the reference clock setting reg. 3, bits 27 & 28, SEL_TIMO_MB2. At 4 MHz the values are:

SEL_TIMO_MB2 (@ 4 MHz, DIV_CLKHS = 0)

= 0 = 64 µs

= 1 = 256 µs

= 2 = 1024 µs

= 3 = 4096 µs recommended

At the end of the time measurement the TDC measures 2 periods of the reference clock for calibration.

Data processing

At the end of the measurement the ALU starts to process the data according to the HIT1, HIT2 settings and transfers the result to the output register. The ALU calculates according to 4.2.2.e and transfers the 32 bit fixed point number to the output register.

The time it takes the ALU depends on the supply voltage to be calculated:

Table 4-2: ALU timings

	2.5 V	3.0 V	3.6 V
First Event (1 Hit)	3.7 µs	3.3 µs	3.1 µs

As soon as the data is available from the output register the interrupt flag is set (assumed that the ALU interrupt is enabled, see reg. 2, EN_INT). Further the load pointer of the output register is increased by 1 and points to the next free memory. The actual position of the load pointer can be seen in the status register, bits 0 to 2.

Reading Data

Now the user can read the data sending the opcode 10110ADR. With the next 32 cycles (calibrated data) the TDC-GP22 will send the result, beginning with the main significant bit (MSB).

The 32 bit fixed-point numbers in complements of 2 represent the time interval in multiples of the reference clock.

$$\text{Time} = \text{RES_X} * T_{ref} * 2^{\text{DIV_CLKHS}}$$

Now all hit data are available from registers 0 to 2. The load pointer value is 3.

At the end the TDC-GP22 has to be initialized again to be ready for the next measurement. This is done by sending the opcode "Init" so that the TDC accepts new Start and Stop hits.

The first rising edge of SCK resets the INTN pin (interrupt).

4.2.3 Stop Masking

The TDC-GP22 can set time-based masking windows for each of the 3 hits on Stop1 input when no hits are accepted. The masking refers to the start event and has an accuracy of less than 10 ns.

The internal enable unit is connected to the external enable pin by a logical AND. The external enable pin must be set to "1" to use the internal masking unit. The configuration settings are made in registers 2 to 4, DELVAL1, DELVAL2 and DELVAL3:

- DELVAL1 ... DELVAL3 are fixed point numbers with 14 bit integer and 5 bit fractional digits, in multiples of the internal reference clock

  $$\text{Delay}_{min} = \text{DELVALX} / 2^5 * T_{ref} * 2^{\text{DIV_CLKHS}}$$
- The minimum mask size is 3 clock cycles
- The mask values must have an ascending order. Each mask value must be 3 clock cycles bigger than the previous value

It is mandatory that if not all registers are used the mask values that are not required are set to "0". When all DELVAL registers are set to 0, the complete unit is disabled.

Example:

4 MHz reference, DIV_CLKHS = 1

DELVAL1 = 'h3200 1st Stop not accepted before 200 µs after Start
(12800/32 * 250 ns * 2^1 = 200 µs)

DELVAL2 = 'h3300 2nd Stop not accepted before 204 µs after Start
(13056/32 * 250 ns * 2^1 = 204 µs)

DELVAL3 = 'h3400 3rd Stop not accepted before 208 µs after Start
(13312/32 * 250 ns * 2^1 = 208 µs)

4.3 Analog Input Section

TDC-GP22 has an additional analog input section which can be used alternatively to the pure digital inputs. Especially the design of ultrasonic flow and heat meters is greatly simplified by this option. The external circuit of the ultrasonic part is reduced to just two resistors and capacitors additional to the piezo transducers.

The ultrasonic signals will be packages of sinusoidal oscillations with several 100 mV amplitude. The signals are coupled to the inputs by means of a high pass filter as the comparator can not handle GND as threshold. The threshold of the comparator is set to 1/3 Vcc. An analog multiplexer selects the input according to the active measurement direction. The comparator is chopper stabilized to guarantee a low offset voltage in the range of < 2 mV. This is mandatory for a good measurement quality. The input offset voltage of the comparator is frequently corrected by an internal chopper circuit. If temperature or supply voltage changes over time, the offset voltage is automatically adapted and holds at < 2 mV.

All elements are controlled by the TDC-GP22 control unit. They are powered only during the measurement to keep down the power consumption.

A measurement sequence, triggered by command Start_TOF_Restart looks like the following procedure, starting with the up flow measurement:

- The 4 MHz oscillator is switched on. The chip waits for the programmed delay to give enough time for the oscillator to reach the full amplitude.
- The comparator, the reference voltage and the analog switches get powered.
- The capacitor of the transmitting path (STOP1) is connected to GND.
- The fire down buffer (FIRE_DOWN) is connected to GND.
- The capacitor of the receiving path (STOP2) is charged up to Vref. The TDC waits the delay set in TW2.
- The analog switch selects STOP2 input as input to the comparator.
- FIRE_UP is selected as TDC START signal.
- The set number of pulses is sent through the fire up buffer, pin FIRE_UP.
- The analog signal at STOP2 passes the comparator converted to a digital signal that is connected to the STOP input of the TDC unit.
- When the delay of the stop masking unit (DELVAL) expired the TDC is ready to measure. It can measure up to 3 stops.

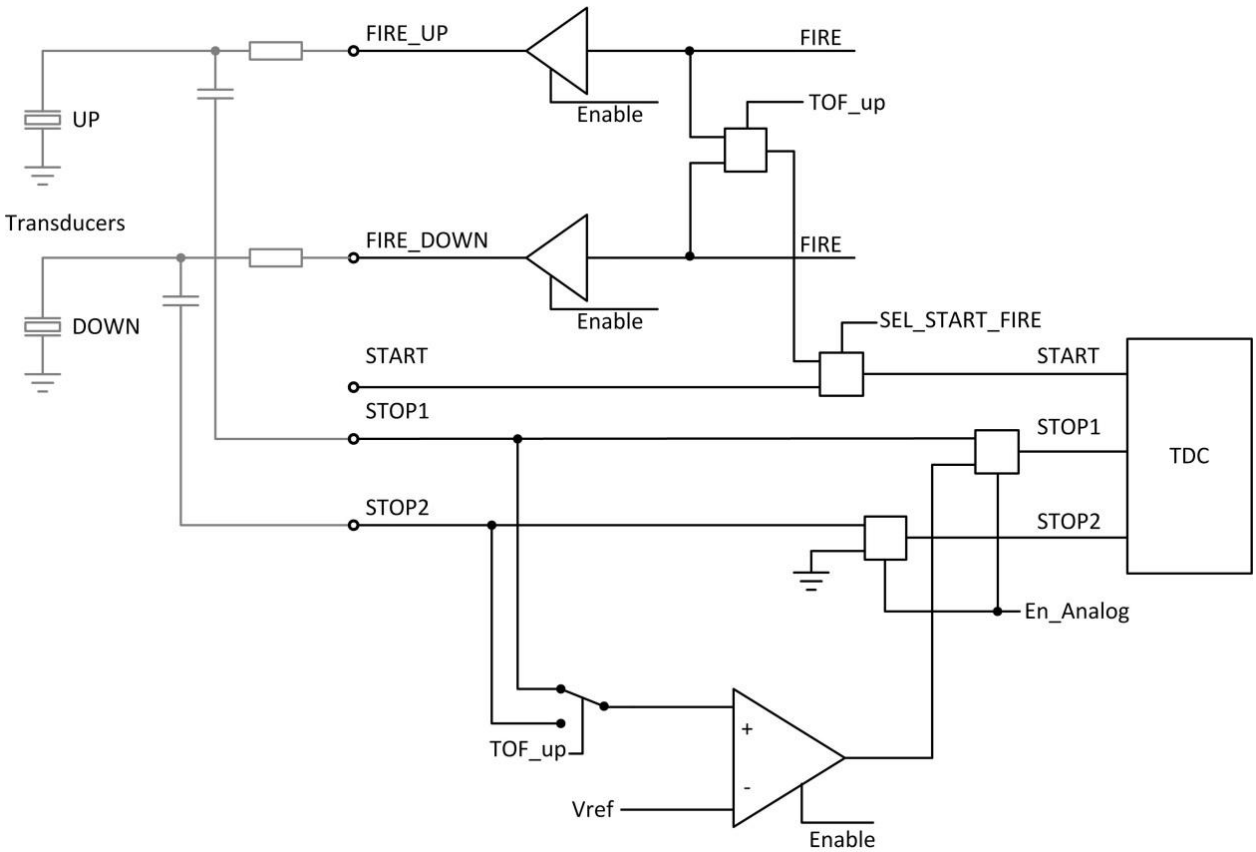

Figure 4.9

- At the end of the measurement the control unit switches off the comparator, the reference the analog switches and the 4 MHz. The current is reduced to close zero. The interrupt flag is set.
- The control unit waits a period, given in multiples of 50Hz/60Hz. During this the processor has to read the results.
- After the delay the same procedure is started but in the opposite direction.

4.3.1 Offset Setting

The offset of the comparator can be set in steps of 1 mV from -8mV to +7 mV by means of parameter DA_KORR, bits 25 to 28 in register 6. DA_KORR is set as 2's complement.

Additionally, with First Wave Mode an additional offset of ±35 mV can be set for the first wave detection. See section 4.4 for details.

4.4 First Wave Mode

The major improvement of TDC-GP22 is the implementation of the First Wave Mode. It is based on measurement mode 2 with the analog section being used. The offset is

controlled automatically to detect the first wave safely and to refer the final ToF measurement relative to the first wave. Additionally, the width of the first half wave is compared to the half wave of the first ToF measurement. The ratio can be used as indicator for the signal strength. Thanks to the offset noise are suppressed and a time out indicates no water in the tube. The following list summarizes the options:

- Save first wave detection, allows high dynamic applications like water meters
- Higher dynamics allow use of 2 MHz or 4 MHz transducers
- Upon the application of transducers with 2-4 MHz, it is necessary to choose a larger interval in the choice of the three waves (e.g. 4-6-8 or 4-7-10), to take account of pulse pair resolution. (> 2 * T_{ref} + 200 ns)
- Even reverse flow can be handled (very helpful e.g. with water meters)
- Pulse width measurement, allows to analyze the strength of the receive signal and to track the trigger level or to send an alarm.
- Offset for noise suppression, allows to indicate an empty tube.

Figure 4-10 illustrates the importance of save first hit detection in flow meters with high dynamic range like water meters. With a fixed stop masking (fixed DELVAL values) it is not possible to recognize if the time-of-flight changes more than the period of the sound signal. There are several reasons that the change in ToF is more than a period. An important one is the influence of temperature which changes the speed of ultrasound. For slow systems like heat meters this might be corrected by intelligent software. But for high dynamic systems like water meters with flow also in the opposite direction this method will no longer be appropriate.

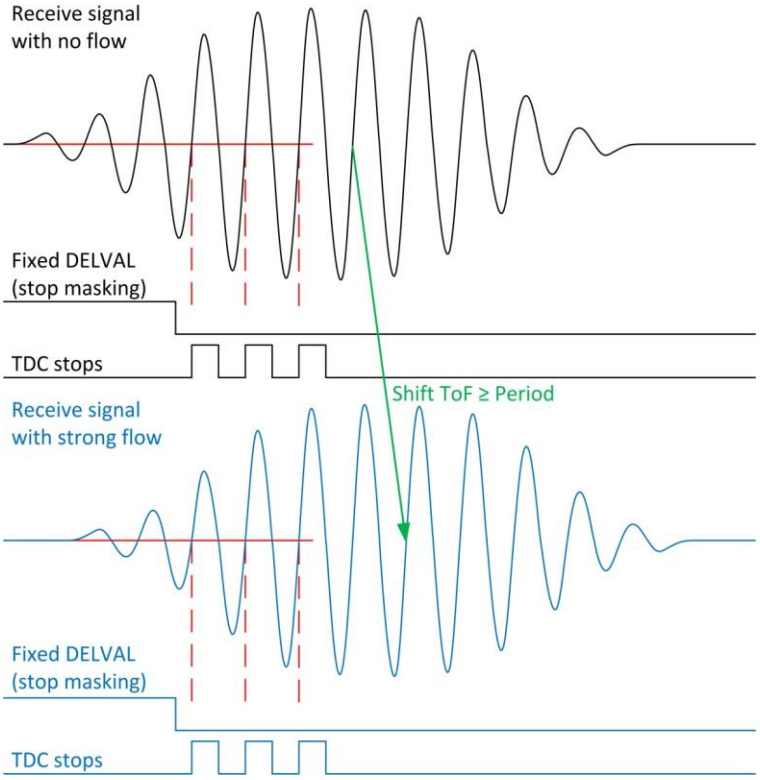

Figure 4-10: Typical error by high fluid dynamics

The trend towards higher transducer frequencies like 2 MHz and 4 MHz is another reason for having a system that can handle intrinsically changes bigger than a signal period.

There is still another source of getting wrong measurements. Dirt deposition on the transducers, spool piece mirrors and housing will lead to signal damping e.g. from ±400 mV to < ±80 mV. Figure 4-11 shows how this will affect the first wave detection at a given, fixed offset for the first wave detection. Once the first wave amplitude is below the offset level the measurement result will jump by one period.

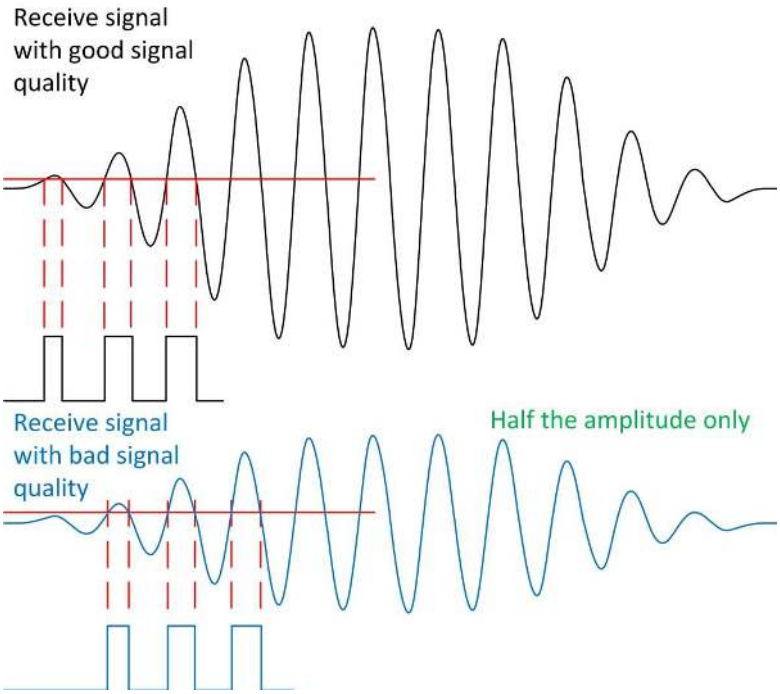

Figure 4-11: Wrong measurement due to signal damping

With the TDC-GP22's first wave detection the time-of-flight measurement is related to the first wave and gets independent from temperature and flow. Miscalculations due to wrong zero crossing assignment are no longer possible.

Additionally, the measurement of the width of the first half wave gives the user a chance to monitor the signal quality and to adjust the first wave offset trigger level if necessary.

The following figure shows the measurement flow in TDC-GP22 first wave mode.

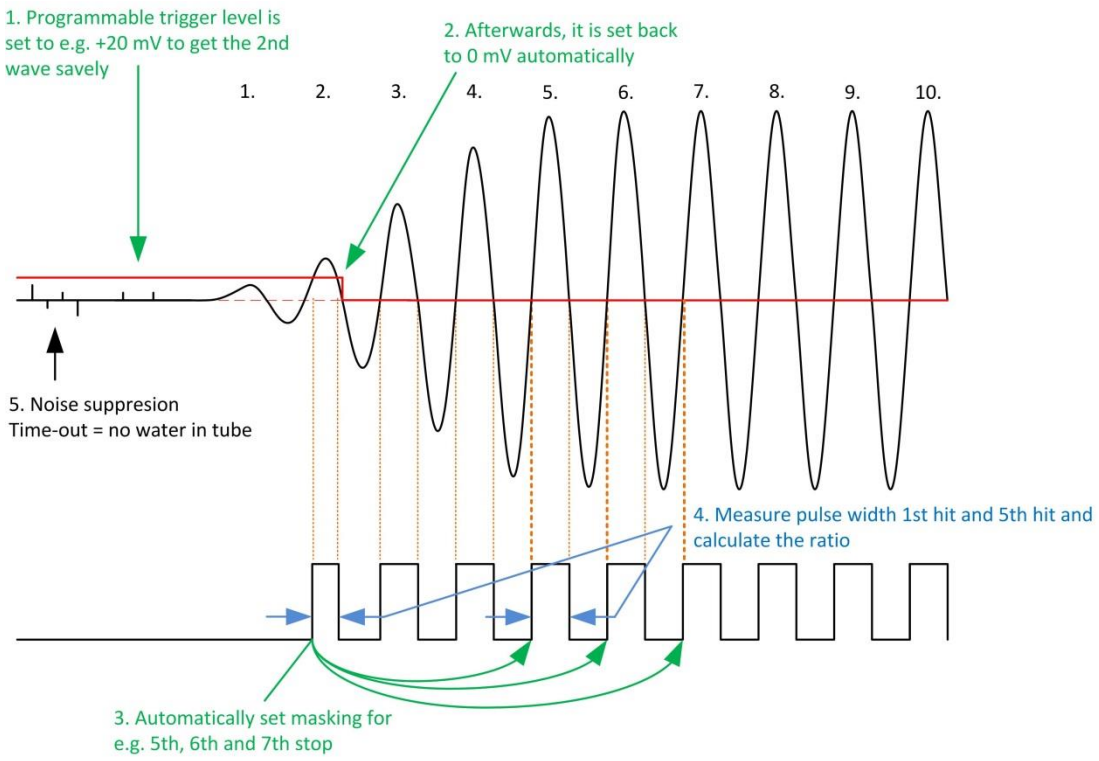

Figure 4-12: First Wave Mode

1. With the fire pulse generator the offset for the first wave detection is set to a programmable level. The DELVAL1 stop masking is used for surprising any noise and it is set just roughly close to the minimum expected time-of-flight. Further noise will be suppressed by the comparator offset until the receive signal reaches the amplitude above this offset level.

2. The TDC-GP22 measure the time interval between rising and falling edge of the first wave. Then, it automatically sets back the offset to 0 mV. With < 1 mV offset the offset drift of the flow measurement over temperature is minimized.

3. The stop masking for the three time measurements is set by parameters DELREL1 to DELREL3, relative to the first wave. E.g. DELREL1 = 3 says the 3rd wave after the first wave is measured.

4. The half wave period (hwp) of the first true time measurement is measured as a reference for the first wave. In the example from figure 4-12 this would be the width of the 5st wave.

The ratio $hwp_{first\ wave}/hwp_{firstToF}$ is in the range of "0" to "1", typically less than "1". The smaller the value the weaker is the receive signal. The information can be used to monitor the flow meter. If there are too many deposits over the years of operation and the signal ration drops e.g. below "0.5" then the second wave can be used as reference in the future.

The signal drop might also be caused by bubbles in the water. Therefore, an alarm message can be sending in parallel to the operator.

5. TDC-GP22 automatically calculates all three stop event and further calculates the average of the three which will be available from register 4. This way, the communication with the microprocessor is simplified a lot. As soon as the interrupt is set the processor can immediately read all three results or just the average value. There is no need to re-write register 1 like it was with TDC-GP21.

6. In case the spool piece is empty then there will be no stop signal. The offset will stay at the level for the first wave detection. This way, noise can not trigger the TDC and the TDC will run into a time-out.

In other words: the timeout is an indicator for an empty tube.

4.4.1 Configuration

The relevant configuration parameters are:

Table 4-3: First Wave Mode Configuration

Reg	Bits	Parameter	Description
3	30	EN_FIRST_WAVE	1 = Switches on the First Wave Mode, Reg3, DELVAL2 and Reg4, DELVAL3 get a new meaning.
4	8 - 12	OFFS	2's complement number setting the offset shift in 1 mV steps 0 = 0 mV 1 = +1 mV ... 15 = +15 mV 16 = -16 mV 17 = -15 mV ... 31 = -1 mV
4	13	OFFSRNG1	1 = Additional offset shift by - 20 mV
4	14	OFFSRNG2	1 = Additional offset shift by + 20 mV
3	8 - 25	DELREL1 to DELREL3	Stop masking, select the xth wave for time-of-flight measurement. Maximum is the 63rd wave. DELREL1 ≥ 3. DELREL1 to DELREL3 have to be set in ascending order. Example: DELREL1 = 3, DELREL2 = 4, DELREL3 = 5 means to measure 3rd, 4th and 5th wave after the first wave
4	16	DIS_PW	0 = switch on / 1 = switch off pulse width measurement. The ratio can be read from address 8, register PW1ST as an 8 bit fixed point number with one integer bit (range 0 to 1.99).
4	15	EDGE_FW	Sets the edge sensitivity for the first wave. With a negative offset it is reasonable to trigger on the falling edge of the first wave. 0 = rising edge, 1 = falling edge
3	31	EN_AUTOCALC_MB2	1 = switch on the automatic calculation of all enabled hits. The sum of the results is written to read measurement result 4 at read register address 3 (=RES_3).

4.5 Temperature Measurement

Especially for heat meter applications the TDC-GP22 has a PICOSTRAIN based temperature measuring unit that offers high resolution and very low current consumption.

The measurement is based on measuring discharge times. Therefore, a capacitor is discharged alternately through the sense resistors and the reference resistors. As an improvement compared to TDC-GP2, the TDC-GP22 has the comparator already integrated.

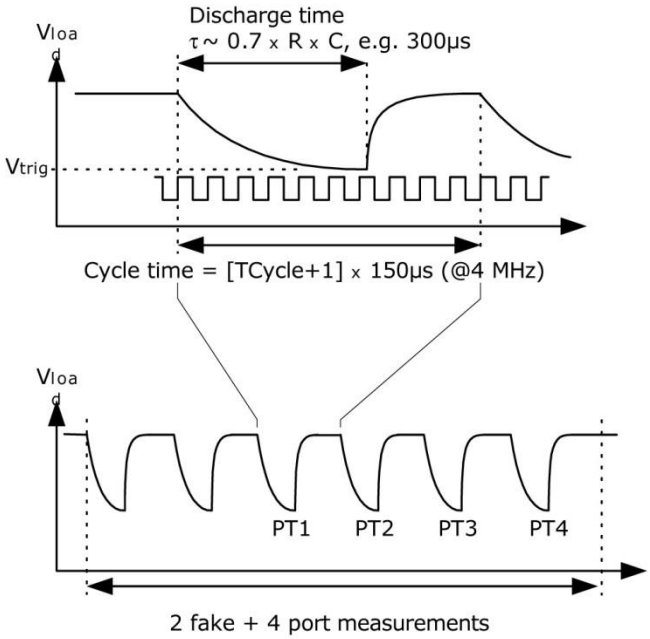

Figure 4.13

The unit has 4 resistor ports, two of them to be used for the temperature sensors for hot water (up) and cold water (down). The other two ports are used for reference resistors. Basically, on reference resistor connected to both ports is sufficient.

The temperature sensors should have a minimum resistance of 500 Ohm. The cable length should not exceed 3 m. TDC-GP22 can measure 2-wire sensors only. It is not possible to use 4-wire sensors. The precision of the temperature measurement is far within the limits of the standard for heat meters when PT500 or PT1000 are used. In combination with PT500 or PT1000 temperature sensors there is no need for two reference resistors. A typical setup with one fixed reference is shown in figure 4-14.

The EMC protection is a recommendation from experience of acam-messelection gmbh. Further information will be shown in section 5.5 EMC Measures.

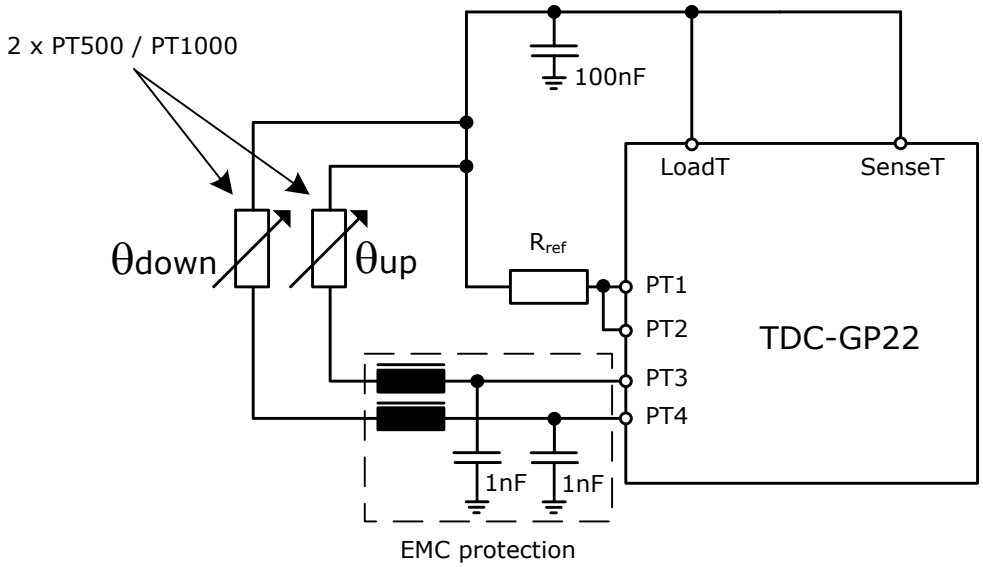

Figure 4.14: PT500 / PT1000 temperature measurement with one reference resistor

The temperature measurement is fully automated. It is triggered by the µC sending the opcodes Start_Temp or Start_Temp_Restart. With Start_Temp_Restart the TDC-GP22 measures the temperature twice, with a delay given in multiples of the 50 Hz/60 Hz period. This will be of help to reduce 50Hz/60Hz noise.

For a measurement, the TDC-GP22 starts with 2 or 8 dummy measurements at port PT1 before it makes the real four measurements in the order PT1 > PT2 > PT3 > PT4. After the 4 measurements have finished the interrupt flag is set. TDC-GP22 has the possibility to inverse the order, making the dummy measurements at port PT4.

The four data are found in registers 0 to 3. From Res_3/RES_1 and RES_4/RES_2 the microcontroller can calculate the ratio Rtemp/Rref. By means of a look-up table it can calculate the temperature for the special type of sensor in use.

Configuration

Register 0, bit 15, ANZ_FAKE sets the number of dummy measurements at the beginning of a temperature measurement. This is necessary to overcome mechanical effects of the load capacitor.

ANZ_FAKE = 0	2 dummy measurements
ANZ_FAKE = 1	7 dummy measurements

Register 0, bit 16, T CYCLE sets the cycle time for the temperature measurement.

TCYCLE = 0	128 µs cycle time @ 4MHz
TCYCLE = 1	512 µs cycle time @ 4MHz

Register 0, bit 17, ANZ_PORT sets the number of ports that will be used.

ANZ_PORT = 0	2 ports = 1 sensor
ANZ_PORT = 1	4 ports = 2 sensors

Register 6, bit 11, TEMP_PORTDIR sets the order of the port measurements

TEMP_PORTDIR = 0	PT1 > PT2 > PT3 > PT4
TEMP_PORTDIR = 1	PT4 > PT3 > PT2 > PT1

Register 6, bit 15, HZ60 sets the base frequency for the delay between the up and down measurements for commands Start_TOF_Restart and Start_Temp_Restart.

HZ60	= 0	50 Hz base
HZ60	= 1	60 Hz base

Register 6, bits 18, 19, CYCLE_TEMP, selects the factor timer for triggering the second temperature measurement in multiples of 50/60Hz.

CYCLE_TEMP	= 0	1
	= 1	1.5
	= 2	2
	= 3	2.5

Register 6, bit 30, NEG_STOP_TEMP inverts this signal at the SenseT path. This is mandatory when the internal comparator is used. Without inversion the unit is compatible to TDC-GP2 operation with an external Schmitt trigger

NEG_STOP_TEMP	= 0	No inversion, TDC-GP2 compatible
	= 1	Inversion, mandatory when the internal comparator is used

Recommended Capacitor Values

The discharge time should be about 150 µs. Therefore the capacitor should have the following value:

PT500: 220 nF

PT1000: 100 nF

Please set TCYCLE = 1 to avoid timeout error.

Recommended Capacitor Type

To get accurate results we recommend capacitor types with very low dC/dU. We recommend:

COG types or CfCap Series from Tayo Yuden

Please do not use X7R or similar capacitors.

Current consumption

By means of the TDC technology the temperature measurement needs an extremely low current, much less than an A/D converter does.

A full temperature measurement with 2 sensors, 2 references am PT1000 sensor type, including all calculations takes less than 2.5 µAs. With one temperature measurement in 30 seconds (typical for heat meters) the average current consumption is 0.08 µA only. This is about 50 times less than other solutions. A PT500 sensor doubles the current.

Note: During temperature measurement the start input has to be enabled.

Error detection

Additionally the temperature unit checks the plausibility of the results. It is able to detect a short circuit of the sensor or an open sensor. The TDC-GP22 provides in the relevant output register an error code instead of a measurement value.

1. Short circuit between lines: equivalent to a very short time interval (< 8 x T_{ref} = 2 µs @ 4 MHz). The TDC-GP22 writes a 'h0 to the output register of the shorted sensor.

2. Broken sensor/Short circuit against GND: equivalent to no stop signal or timeout. The TDC-GP22 writes a 'hFFFFFFFF into the output register of the open sensor.

Note: Due to a bug it is necessary to have SEL_TIM0_MB2 at 2ms to get a correct interrupt indication when 512 µs cycle time is selected.

1: Short circuit between lines: Error short

2: Short circuit LoadT against GND: Error open

3: Circuit circuit PT2 against GND: Measurement at PT1 with half the nominal discharge time as sensor is in parallel to Rref, result out of reasonable range

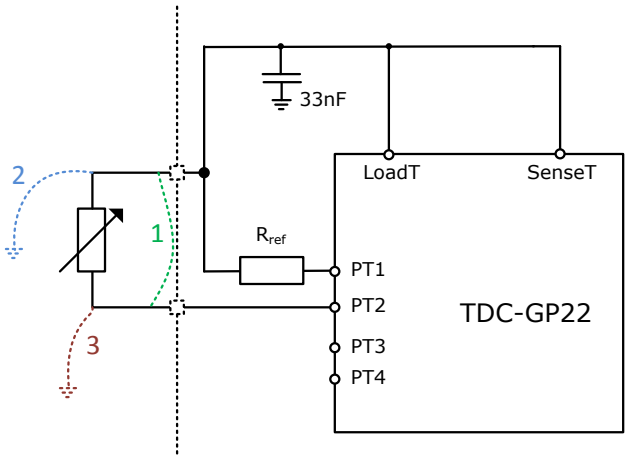

Figure 4-15: Short circuit indication

Table 4.4: Analog specification

Symbol	Terminal		Internal Schmitt trigger		External Schmitt trigger[2]		Unit
			PT500	PT1000	PT500	PT1000	
	Resolution RMS		17.5	17.5	16.0	16.0	Bit
	SNR				96	96	dB
	Absolute Gain[3]		0.9912	0.9931	0.9960	0.9979	
	Absolute Gain vs. Vio[3] (gain factor)	3.6 V	0.9923	0.9940	0.9962	0.9980	
		3.0 V	0.9912	0.9931	0.9960	0.9979	
		2.5 V	0.9895	0.9915	0.9956	0.9979	
	Gain-Drift vs. Vio		0.25	0.23	0.06	0.04	%/V
	max. Gain Error (@ dΘ = 100 K)		0,05%	0,05%	0,02%	< 0.01%	
	Gain-Drift vs. Temp		0.022	0.017	0.012	0.0082	%/10 K

	Gain-Drift vs. Vio			0,08		%/V
	Initial Zero Offset	< 20	<10	< 20	< 10	mK
	Offset Drift vs. Temp	< 0.05	< 0.03	< 0,012	< 0.0082	mK/ °C
	PSRR			>100		dB

[1] All values measured at Vio = Vcc = 3.0 V, Cload = 100 nF for PT1000 and 200 nF for PT500 (COG-type)

[2] measured with external 74AHC14 Schmitt trigger

[3] compared to an ideal gain of 1

Gain error and its mathematical correction

The TDC-GP22 temperature measurement is based on acam's PICOSTRAIN technology. Here the resistance variation of an RTD is digitized by means of a high accurate time interval measurement. According to that, the Schmitt trigger's delay time introduces a considerable gain error that results in a gain reduction compared to an ideal output value. This gain reduction can be mathematically described as a deviation from an ideal straight line. Hence, a simple mathematical correction by adding a correction factor compensates for this deviation from the ideal gain. It is calculated as follows:

$T_{corr} = T_{uncorr}$/gainfactor

with

T_{corr}: gain corrected temperature result

T_{uncorr}: uncorrected temperature result

gainfactor: gain correction factor, compensates the deviation from an ideal gain of 1

By means of this compensation, the effect of the Schmitt trigger's delay time can be reduced to a residual gain error of 0.05 % of F. S. with the internal Schmitt trigger, or even less in combination with an external 74AHC14 Schmitt trigger.

Three main parameters have to be considered, to select the correct gain factor:

- base resistance of the temperature sensor (e.g. PT500, PT1000)
- used Schmitt trigger (GP22-internal, external 74AHC14)
- GP22 supply voltage

The appropriate gain correction factors are provided in table 4-3 ("Absolute gain vs. Vio").

Import note:

The gain correction factors for the external Schmitt trigger exclusively refer to the 74AHC14 Schmitt trigger. Other types (e.g. 74HC14) require different gain factors, in order to ensure a correct compensation. According to that, we strongly recommend to use a 74AHC14 as external Schmitt trigger.

Example 1:

Application with PT1000 Sensor, GP22 internal Schmitt trigger and 3.0 V supply voltage. According to table 4.3 a gain factor of 0.9931 has to be selected. The gain corrected result is calculated then by the following equation:

$$T_{corr}=T_{uncorr}/0.9931$$

Example 2:

Application with PT500 Sensor, external 74AHC14 Schmitt trigger and 3.6 V supply voltage. Table 4-3 now specifies a gain factor of 0.9980. The gain corrected result is calculated as follows:

$$T_{corr} = T_{uncorr}/0.9980$$

5 Details and Special Functions

5.1 Oscillator

The TDC-GP22 uses up to 2 clock signals depending on the operating mode:

- High-speed clock, typically 4 MHz, for calibration and as a predivider for the TDC measuring unit in measurement mode 2 and for the EEPROM
- 32 kHz clock signal used for internal timer functions.

5.1.1 High-Speed Oscillator

Generally, the TDC-GP22 needs a high-speed clock for calibration. The recommend value is 4 MHz, the possible range is 2 to 8 MHz (2 to 6 MHz in QUAD_RES mode). When running in measurement mode 2 the TDC-GP22 needs the high-speed clock signal also as a part of the time measuring unit. Finally the operations need the high speed clock, too.

The oscillator takes an average current of 200 µA when running all the time. But as it is needed only during the time measurement, the TDC-GP22 has the capability to control the on-time by itself. The settings are done with parameter START_CLKHS. With START_CLKHS > 1 the oscillator is switched on after sending opcodes Start_TOF, Start_TOF_Restart, Start_Temp and Start_Temp_Restart for the duration of the measurement. A delay between starting the oscillator and starting the measurement guarantees sufficient time for the oscillation to settle at full amplitude.

Note:
It is strongly recommended to use a ceramic oscillator. Exactly because a quartz needs much longer to settle than a ceramic oscillator. This costs a lot current, but using a quartz oscillator has no advantage.

START_CLKHS

= 0	Oscillator off
= 1	Oscillator continuously on
= 2	The measurement is started with 480 µs delay.
= 3	same as '2', but with 1.46 ms delay
= 4	same as '2', but with 2.44 ms delay
= 5 to 7	same as '2', but with 5.14 ms delay

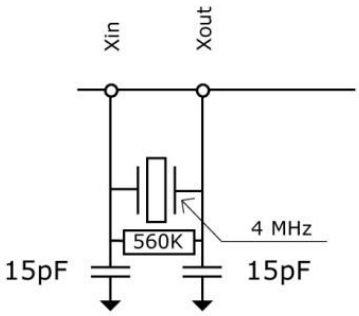

Figure 5.1

The programmable delay guarantees that the oscillator has settled before the measurement starts. For ceramic resonators 480 µs will be sufficient. For quartz the necessary delay might reach the maximum of 5.14 ms.

By this measure the average current consumption can be drastically reduced.

Example:

At one ToF measurement in an ultrasonic flow meter (forth/back) per second the high-speed oscillator is active only for about 2 ms.
The average current consumption is 130 µAs * 2 ms = 0.26 µA.

5.1.2 32.768 kHz Oscillator

The TDC-GP22 needs a 32.768 kHz reference for the start-up control of the high-speed clock and the clock calibration. It therefore offers an integrated low-power driver.

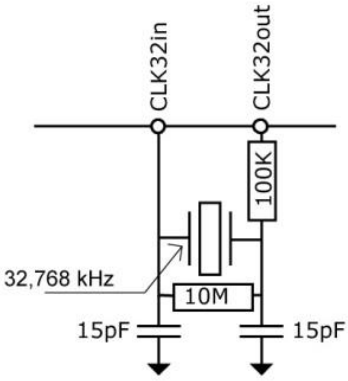

Figure 5.2

The 32.768 kHz oscillator is permanently running and has a current consumption of only about 0.5 µA at 3.0 V. The settling time of this oscillator is about 3 s after power-up. The 32.768 kHz oscillator cannot be switched off. With an external 32 kHz clock from the microprocessor pin CLK32in has to be connected to GND.

The low-power clock can be internally forwarded to an output pin to be available for an external microprocessor. The possible settings are:

SEL_TST01 = 7: 32 kHz output at pin FIRE_IN

SEL_TSTO2 = 7: 4 kHz (32 kHz/8) output at pin EN_START

It is also possible to provide an external low-frequency rectangular clock at the CLK32Out pin (3.6 V max.).

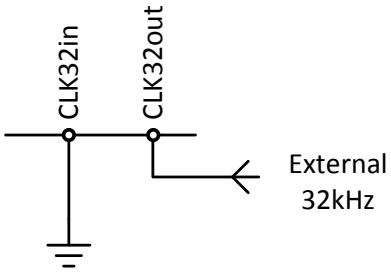

Figure 5.3

5.1.3 Calibrating a Ceramic High-speed Oscillator

Using a ceramic oscillator for the 2 to 8 MHz clock will be attractive because it is of low cost and has a fast settling time. Unfortunately it has a poor tolerance of 0.3 to 0.5 % and shows a temperature drift. For this reason the TDC-GP22 allows to execute a calibration measurement that allows to compensate this behavior. This measurement is based on the very precise 32.768 kHz clock. The TDC-GP22 generates start/stop pulses from the 32.768 kHz and measures this time interval with its TDC unit. The result is stored in the result register and the interrupt flag is set. The frequency error of the ceramic resonator can be calculated by the microprocessor. The calibration is configured by setting register 0, ANZ_PER_CALRES and is started with "START_Cal_Resonator" - instruction by the microprocessor.

The time interval to be measured is set by ANZ_PER_CALRES which defines the number of periods of the 32.768 kHz clock:

ANZ_PER_CALRES	= 0	2 periods =	61.035 µs
	= 1	4 periods =	122.070 µs
	= 2	8 periods =	244.140 µs
	= 3	16 periods =	488.281µs

The results is given in multiples of the high-speed clock and (divided by 1, 2 or 4 (DIV_CLKHS)) as 32 bit fixed point numbers with 16 integer bits and 16 fractional bits.

The microcontroller can compare this measured value to the theoretical value and calculate the correction factor for the frequency.

$$RES_{theor} = \frac{2 * \left(\frac{1}{32{,}768kHz\ Clock} * 2^{ANZ_PER_CALRES}\right)}{t_{4Mz\ Resonator}} = theoretical\ value$$

$$RES_X = measured\ value$$

$$Correction\ factor = \frac{RES_{theor}}{RES_X}$$

$$Calibrated\ HSCLK\ freq. = HSCLK\ freq.\ *\ Correction\ factor$$

Example:

The system shall work with a 4 MHz resonator. With DIV_CLKHS = 0 and ANZ_PER_CALRES = 1 the theoretical result is 122.0703125µs/250ns = 488.28125 (RES_0 = 'h01E84800). If the ceramic resonator in use is not exactly at 4 MHz but only 3.98 MHz the calibration measurement will show 485,83984375 (RES_0 = 1E5D700). The correction factor for the microcontroller is 1.005.

Note: During clock calibration the start input has to be enabled.

Source Code Example:

```
//-----------------------------------------------------------------------
// Start Calibrate High Speed Clock Cycle
// NOTE: It does not work in combination with EN_AUTOCALC = 1

gp22_wr_config_reg(Bus_Type, 0x83, 0x00000000); // EN_AUTOCALC=0

    gp22_send_1byte(Bus_Type, Init);
    gp22_send_1byte(Bus_Type, Start_Cal_Resonator);

    // Wait for INT Slot_x
    Wait_For_Interrupt(Bus_Type);

    //Calculate Correction factor (ANZ_PER_CALRES=1)
    CLKHS_freq_corr_fact = 122.070/
        gp22_read_n_bytes(Bus_Type, 4, 0xB0, 0x00, 16) * CLKHS_freq;

    printf("\n Correction factor for clock = %1.3f\n", CLKHS_freq_corr_fact);

    CLKHS_freq_cal *= CLKHS_freq_corr_fact; // Calibrated Clock frequency

gp22_wr_config_reg(Bus_Type, 0x83, 0x80000000); // EN_AUTOCALC=1
//-----------------------------------------------------------------------
```

5.1.4 How to use Clock Calibration

a. Application

This option is dedicated especially to ultrasonic flow and heat meters. In those applications the use of ceramic oscillators shows two main advantages: lower cost and less current consumption. Mainly because of the short oscillation start-up time of the ceramic oscillator the operating current can be reduced by several µA. Referring to 10 years of operation this saves several 100 mAh in battery capacitance. There is no negative effect on the resolution when using this option the correct way.

b. Jitter of the 32 kHz clock and consequences

The 32 kHz clock is very precise in frequency with only a few ppm error. However, the phase jitter is about 3 to 5 ns peak-peak. For this reason also a calibration measurement (Start_Cal_Resonator) has this error. When multiplying a measurement result with the calibration result, the jitter of the calibration is transferred to the result by the ratio calibration measurement time (see ANZ_PER_CALRES) to measurement time. Using a permanently updated calibration value will add a considerable jitter to the measurement result.

c. Application of this option in ultrasonic flow meters

A measurement result is always made of two single time-of-flight measurements in ultrasonic flow meters, with and against the flow direction. The difference between those measurements is a measure for the flow. To avoid an influence of the calibration jitter on this measurement result it is necessary only to use the same calibration for both ToF measurements. Following this, the difference between the two ToF measurements will be free of the jitter of the clock calibration measurement. The clock can be calibrated only between measurements that are not directly subtracted from each other.

5.2 Fire Pulse Generator

5.2.1 General Description

The fire pulse generator generates a sequence of pulses which is highly programmable in frequency, phase and number of pulses. The high-speed oscillator frequency divided by the factor selected for DIV_CLKHS is used as the basic frequency. This frequency is internally doubled and can freely be divided by a factor of 2 to 15. It is possible to generate 1 to 127 pulses. If maximum 15 pulses are sent the phase for each pulse can be adjusted per

register configuration. The fire pulse generator is activated by sending opcode Start_TOF. The fire pulse maybe used directly for the START of the TDC.

The fire pulse generator provides 2 outputs, FIRE_UP and FIRE_DOWN. The driver strength of each output is 96 mA @ 3.3 V. Furthermore, FIRE_DOWN output signal can be inverted to double the signal amplitude. The outputs can be set individually High-Z. Alternately, the default level of the inactive buffer can be set to GND.

5.2.2 Configuration

Number of pulses:

ANZ_FIRE	= 0	Switch off fire pulse generator
	= 1	1 pulse
	= 2	2 pulses
	...	...
	= 127	127 pulses
SEL_START_FIRE	= 1	Fire pulse is used as TDC START
FIRE_DEFAULT	= 0	Default level High-Z (GP2 compatible)
	= 1	Default level GND. Mandatory if the internal analog circuit and the recommended circuit with external R and C is used.

Phase:

The phase of each pulse can be defined in register 5, PHFIRE[0..14], (Mandatory: PHFIRE[15] = 0), if not more than 15 pulses are sent. "0" stands for HIGH-LOW and "1" for LOW-HIGH. The pulse sequence begins with the LSB and ends with the MSB.

Example:

ANZ_FIRE = 15, PHFIRE = 'h0055

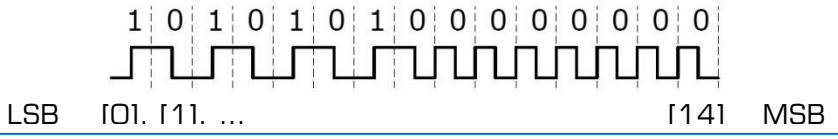

It is an easy way to halve the pulse frequency. For that use PHFIRE = 'h5555 and defining straight number of ANZ_FIRE = 14.

Fire pulse frequency:

The input signal fireclk1 for the fire pulse generator is derived from the high speed clock CLKHS and the selected value for the high speed clock divider DIV_CLKHS.

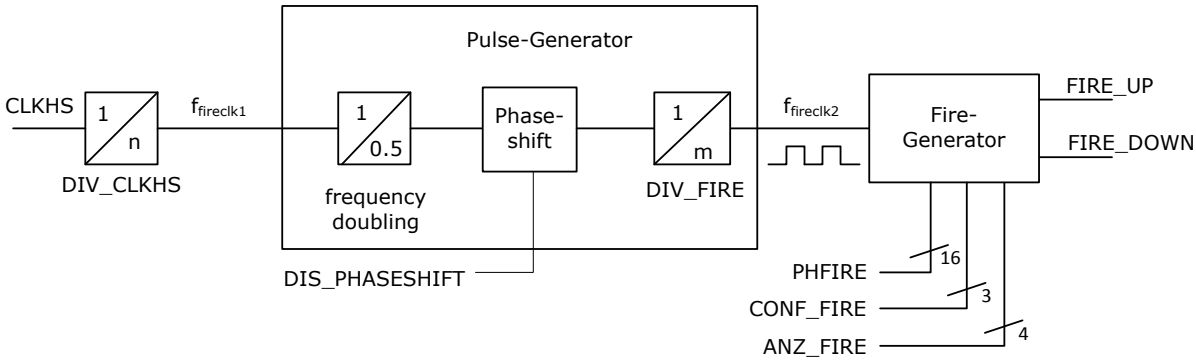

Figure 5.3

This Signal is internally doubled and divided by DIV_FIRE.

DIV_FIRE =	0	not permitted
	1	divided by 2
	2	divided by 3
	…	…
	15	divided by 16

Register 5, bit 19, DIS_PHASESHIFT actives the phase shift, which introduces additional noise to improve statistical behavior when averaging.

DIS_PHASESHIFT = 0 Phase shift on

DIS_PHASESHIFT = 1 Phase shift off

$$f_{fireclk2} = f_{fireclk1} * \frac{2}{DIV_FIRE + 1}$$

fireclk2 is used as reference signal for the FIRE_UP / FIRE_DOWN - signal which is emitted by the output buffers FIRE_UP / FIRE_DOWN of the fire pulse generator.

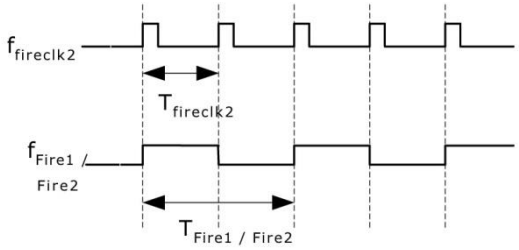

Figure 5.4

As shown in Figure 16 at least 2 clock periods $T_{fireclk2}$ are required to send one fire pulse. One for the high phase and one for the low phase of the FIRE_UP/FIRE_DOWN output signal.

Example:

CLKHS = 4 MHz, DIV_CLKHS = 1, DIV_FIRE = 1

$$f_{fireclk2} = f_{fireclk1} * \frac{2}{DIV_FIRE + 1} = 2MHz$$

Max. frequency of the FIRE_UP / FIRE_DOWN output signal:

$$f_{Fire1/Fire2} = \frac{1}{2} * f_{fireclk2} = 1MHz$$

Driver outputs:

The output drivers are configured by setting CONF_FIRE in register 5, bits 29 to 31:

CONF_FIRE configures the FIRE_UP and FIRE_DOWN outputs of the GP22. CONF_FIRE is used to control which of the outputs (FIRE_UP or FIRE_DOWN) are first fired when the Start_TOF_Restart command is issued. It is also used to individually enable or disable these outputs.

Only one of the three bits may be set to 1:

Bit 31 = 1	Fire both outputs (FIRE_UP and FIRE_DOWN) simultaneously. In this case, the FIRE_DOWN output is an inverted representation of FIRE_UP.
Bit 30 = 1	Enable FIRE_UP output only, or when Start_TOF_Restart is issued, fire this output first.
Bit 29 = 1	Enable FIRE_DOWN output only, or when Start_TOF_Restart is issued, fire this output first.

Note:

In register 5, bits 16 to 18, REPEAT_FIRE originally had been implemented for sing around measuring. Please set

REPEAT_FIRE = 0 no repetition

5.3 Fast Initialization

In measurement mode 1 the TDC-GP22 offers the possibility of a fast initialization. Activated by setting register 1, bit 15, EN_FAST_INIT = "1" the interrupt flag automatically initializes the TDC. So the TDC is already prepared for the next measurement while the data can be read out. This mode is for highest speed applications only. It is most reasonable for un-calibrated measurements with only one stop.

5.4 Noise Unit

In case the user wants to improve the measuring results by averaging it is necessary that the values do not always display exactly the same time difference. Instead the user should provide some "noise" so that different quantization steps of the characteristic curve of the TDC are involved. This can not happen with very constant time differences. One would constantly hit the same LSB.

The noise unit enables the use of weighted averaging even for constant time differences. The noise unit adds a random offset to the start. It is dedicated to applications where the TDC gets a dummy start and measures the time difference between STOP1 and STOP2 (e.g. laser range finders).

The noise unit is switched on by setting register 5, bit 28, EN_STARTNOISE = "1"

5.5 EMC Measures

Regarding the EMC susceptibility, there are measures we can recommend:

- Most importantly: the housing of the spool-piece must be connected to the electrical GND signal of the PCB
- Using ferrite cores with ~100 Ohm @ 100 MHZ with a low DC resistance, e.g. MURATA - BLM18EG101TN1D - FERRITE BEAD (Impedance: 100 Ohm, DC Resistance Max: 0.045 Ohm, DC Current Rating: 2000 mA, Ferrite Case Style: 0603)
- Using capacitors (value = 1 nF) between fire outputs and GND
- Using a shielded cable
- Common mode chokes are not needed

With these measures, we usually see significant improvement.

Please make sure that the capacitors are of COG type. Use no other types. Values up to 2.2 nF should work without too big disturbance on the measurement result.

EMC protection of transducer (acam-messelectronic gmbh)

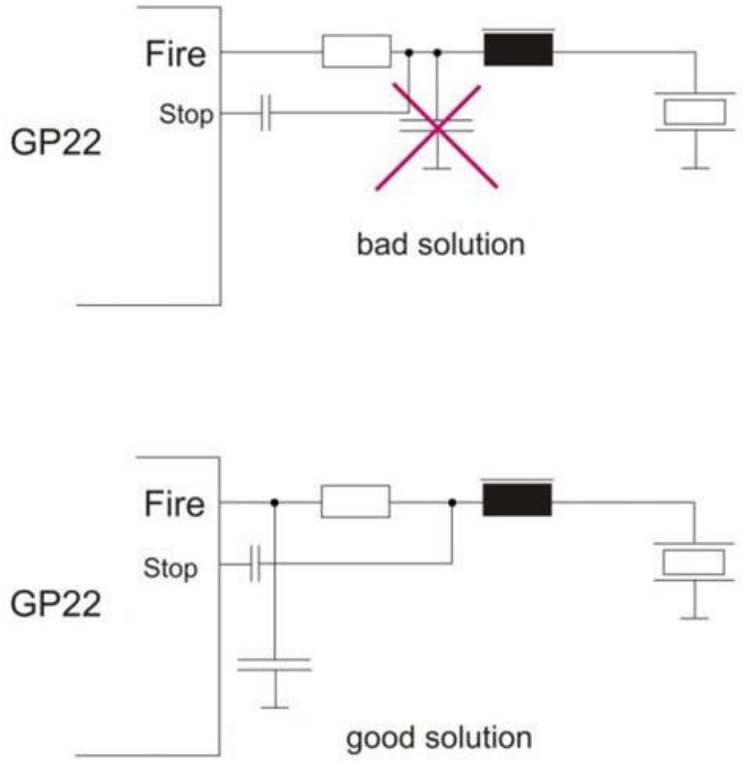

Figure 5.4

6 Applications

6.1 Ultrasonic Heat Meter

The TDC-GP22 is perfectly suited for low-cost ultrasonic heat meter designs. Thanks to the implemented functionality, including precision temperature measurement, fire pulse generator, analog switches, comparator, windowing and clock calibration, it is sufficient to add a simple microprocessor (without A/D converter).

The final circuit reaches a unknown level in compactness and small size. The following diagram shows the front end section of a typical ultrasonic heat meter as it might look like when TDC-GP22 is used.

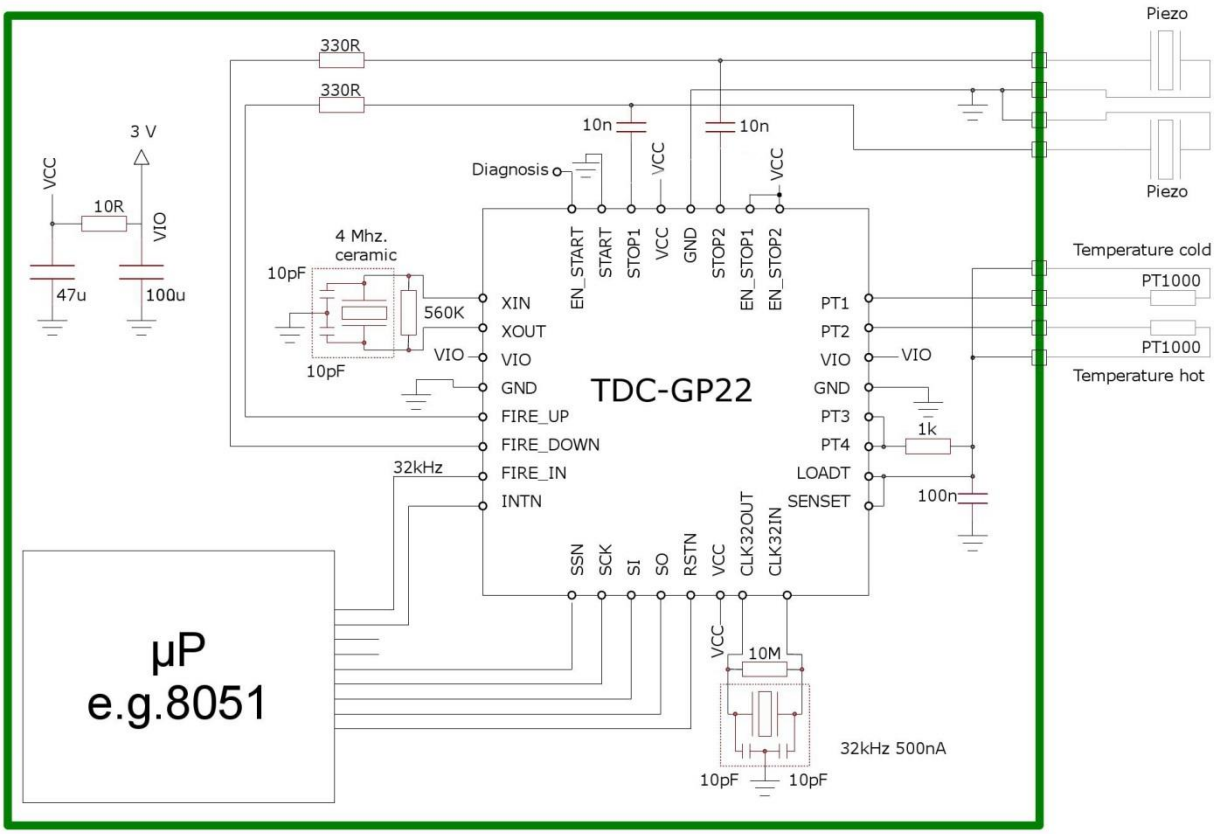

Figure 6.1

The red parts illustrate the external components needed. The number is reduced to a minimum:

- In the ultrasonic path, the piezo transducers are connected through pairs of R and C.

- In the temperature path only a temperature stable reference resistor and a capacitor
- As oscillators take a 32.768 kHz and a ceramic 4 MHz oscillator. The FIRE_IN pin can be used as output driver for the 32.768 kHz clock, so the µP does not need a low power oscillator.
- For the power supply use separate bypass capacitors of sufficient size to block Vcc and Vio. Separate both by a small resistor.

In total 11 low-cost elements only are needed for the measurement.

Register	Value	Typical example configuration
Register 0	'hA30B6800	ANZ_FIRE = 10 (see register 6, too) DIV_FIRE = 3, fire pulse frequency = 4 MHz/4 = 1.0 MHz ANZ_PER_CALRES = 0, the 4 MHz is calibrated by a 61.035 µs measurement DIV_CLKHS = 0, the 4 MHz ceramic oscillator is internally used as it is START_CLKHS = 2, the ceramic oscillator has 480 µs to settle ANZ_PORT = 1, use all 4 ports for the temperature measurement TCYCLE = 1, 512 µs cycle time for the temperature measurement ANZ_FAKE = 0, 2 fake measurements SEL_ECLK_TMP = 1, use 4 MHz for the temperature measurement cycle definition CALIBRATE = 1, mandatory in measurement mode 2 to be on NO_CAL_AUTO = 0, mandatory in measurement mode 2 to have auto-calibration MESSB2 = 1, switch on measurement mode 2 for measuring > 2 µs. NEG_STOP/NEG_START = 0, all set to rising edges ID0 = 'h00
Register 1	'h21444000	HIT2 = 2, HIT1 = 1: calculate 1. Stop - Start in measurement mode 2 EN_FAST_INIT = 0, off HITIN2 = 0 HITIN1 = 4, measure 3 stops (in measurement mode 2 this includes the start, too, giving 4 hits) CURR32K = 0, use default SEL_START_FIRE = 1, use the internal direct wiring from the fire pulse buffer to the TDC start SEL_TST02 = 0, EN_START active SEL_TST01 = 0, FIRE_IN pin is used as fire in ID1 = 'h00
Register 2	'hA0230000	EN_INT = b0101, interrupt given by Timeout TDC or ALU ready RFEDGE1 = RFEDGE2 = 0, use only rising edges DELVAL1 = 8960, the first stop is accepted after 70 µs ID2 = 'h00
Register 3	'hD0A24800	EN_AUTOCALC_MB2 = 1, automatic calculation of the sum of RES_0, RES_1 and RES_2. This calculation does not increase the address pointer. EN_FIRST_WAVE = 1, first hit detection mechanism is enabled EN_ERR_VAL = 0, there is enough time to read the status register SEL_TIM0_MB2 = 2 , time out is generated after 1024 µs DELREL1 = 8, DELREL2 = 9, DELREL3 = 10, measure the 8th, 9th and 10th stop after the first hit

		ID3 = 'h00
Register 4	'h20004A00	DIS_PW = 0, pulse width measurement is not disabled EDGE_PW = 0, pulse width measured on rising edge OFFSRNG1 = 0, no negative offset OFFSRNG2 = 1, OFFS = 10: total offset = 20 mV + 10 mV = 30 mV ID4 = 'h00
Register 5	'h40000000	CON_FIRE = 2, enable FIRE_UP. If opcode Start_TOF_Restart is used FIRE_UP and FIRE_DOWN are used alternately for up and down flow measurements. With the configuration described here the measurement cycle starts sending fire pulses at pin FIRE_UP. EN_STARTNOISE = 0, switch off DIS_PHASESHIFT = 0, phase noise unit is active to improve the statistical behavior REPEAT_FIRE = 0, no sing-around PHFIRE = 0, no phase change in the fire pulse sequence ID5 = 'h00
Register 6	'hC0C06000	EN_ANALOG = 1, use the internal analog circuit NEG_STOP_TEMP = 1, use the internal Schmitt trigger for the temperature measurement DA_KORR = 0, offset is set in register 4 TW2 = 3, 300 µs delay to charge up the capacitors of the highpass EN_INT = b0101, interrupt given by Timeout TDC or ALU ready (see also register 2) START_CLKHS = 2, the ceramic oscillator has 480 µs to settle (see also register 0) CYCLE_TEMP = 0, use factor 1.0 for the Start_Temp_Restart CYCLE_TOF = 0, use factor 1.0 for the delay between two ToF measurements HZ60 = 0, 50 Hz base FIRE0_DEF = 1, mandatory when using the internal analog circuit QUAD_RES = 1, use 23 ps BIN DOUBLE_RES = 0 TEMP_PORTDIR = 0, standard order for T measurement ANZ_FIRE = 10 (see register 0, too) ID6 = 'h00

Measurement flow:

Power-on reset:

Send SO = 'h50

Calibrate Clock:

Send SO = 'h03 Start_Cal_Resonator

Check-loop INTN = 0?

Send SO = 'hB0, Read SI = RES_0

Correction factor = 61.035/RES_0

Measurement loop:

Temperature measurement, every 30 seconds:

Send SO = 'h02 Start_Temp

Check-loop INTN = 0?

Send SO = 'hB4, Read SI = STAT

STAT&'h1E00 > 0: -> Error routine

Send SO = 'hB0, Read SI = RES_0

Send SO = 'hB1, Read SI = RES_1

Send SO = 'hB2, Read SI = RES_2

Send SO = 'hB3, Read SI = RES_3

Rhot/Rref = RES_0/RES_1

Rcold/Rref = RES_3/RES_2

Go to look-up table to get the temperature.

Time-of-flight measurement every half second:

Send SO = 'h70 Initialize TDC

Send SO = 'h05 Start_TOF_Restart

Check-loop INTN = 0? (TOF_UP)

Send SO = 'hB4, Read SI = STAT

STAT&'h0600 > 0: -> Error routine, timeout = empty tube.

Send SO = 'hB3, Read SI = RES_3

Send SO = 'h70 Initialize TDC

Check-loop INTN = 0? (TOF_DOWN)

Send SO = 'hB4, Read SI = STAT

STAT&'h0600 > 0: -> Error routine

Send SO = 'hB3, Read SI = RES_3

µP can now start the data post-processing and calculate the flow and the heat.

Check signal strength via pulse width:

Send SO = 'hB8, Read SI = PW1ST

If PW1ST < 0.3 signal is too weak, alarm

7 Miscellaneous

7.1 Bug Report

7.1.1 TDC-CAL read error without Quad resolution

In case quad resolution is not set then reading separately the TDC cal value will give a wrong read value. The internal calibration value is correct, but the transfer to the read register is not correct. Therefore, measurement data are not affected.

Effect in Measurement mode 2:

- In this mode the cal value is for information only. Further, quad resolution is recommended anyway.

Effect in Measurement mode 1:

- Customers using auto calibration are not affected.

- Only customers that want to read uncalibrated data and do external calibration are affected.

Workaround:

- The calibration data are not addressed directly after the calibration measurement but after the next regular measurement, before the next INIT.

Example:

```
Reg1 = ’h21...
Reg1 = ’h67...
result0 = read(adr=0)
cal = read(adr=1)
INIT
```

7.1.2 Timeout Temperature Measurement

Note: Due to a bug it is necessary to have SEL_TIMO_MB2 at 2ms to get a correct interrupt indication when 512 µs cycle time is selected.

7.1.3 Timeout and Pulse-width Measurement

Problem:

In case there is a timeout (e.g. because of air in the spool piece) the pulse-width measurement starts but does not end before there is an INIT. The current is increased by 500 µA. The problem appears only with active pulse-width measurement.

Solutions:

1. It is mandatory to answer to any interrupt from TDC-GP22 by minimum an INIT command. Even in case you know the next data are bad you need to send an INIT to stop the pulse-width measurement. Also in case you don't read the data. Of course, timeout has to be selected as an interrupt source.

2. If pulse-width information is not used then switch off this unit.

7.2 Last Changes

02.11.2011	Version 0.0 for release
27.01.2012	Version 0.1 for release, sections 6 and 7 modified
29.03.2012	Version 0.3 for release, 7.1.2 new, registers 1 and 4 corrected
24.05.2012	Version 0.4. for release, page 2-6, page 3-7
26.06.2012	Version 0.5. for release, page 7-1 and 7-2, section 7.1.3, page 2-9 package outline
15.02.2013	Version 0.6 for release
23.05.2013	Version 0.7 Correction Status register (EEflags). Smaller additions.
12.11.2013	Version 0.8 In Measurement Mode 2 Tmin=700ns adapted; Expands section 2.6 Power Supply, page 2-15; Description EN_ANALOG (Register 6) adds, page 3-12 Description of the ALU Operation Pointer adds; page 3-16; Important supplement to writing the EEPROM, page 3-18; Expands section 4.4 First Wave Mode, page 4-19 Description of the configuration of the Fire Pulse Generator adds, page 5-6 Add new section 5.5 EMC Measures, page 5-10 Revised the used registers, page 6-2;
13.03.2014	Version 0.9: EMC section corrected

acam
mess • electronic

acam-messelectronic gmbh
Friedrich-List-Straße 4
76297 Stutensee-Blankenloch
Germany
Phone +49 7244 7419 – 0
Fax +49 7244 7419 – 29
E-Mail support@acam.de
www.acam.de

acam-messelectronic gmbH

is now

Member of the ams Group

The technical content of this acam-messelectronic document is still valid.

Contact information:

Headquarters:
ams AG
Tobelbaderstrasse 30
8141 Unterpremstaetten, Austria
Tel: +43 (0) 3136 500 0
e-Mail: ams_sales@ams.com

Please visit our website at **www.ams.com**